BIZET 670SX

Manual

500 & 600 W LED PROFILE SPOTS

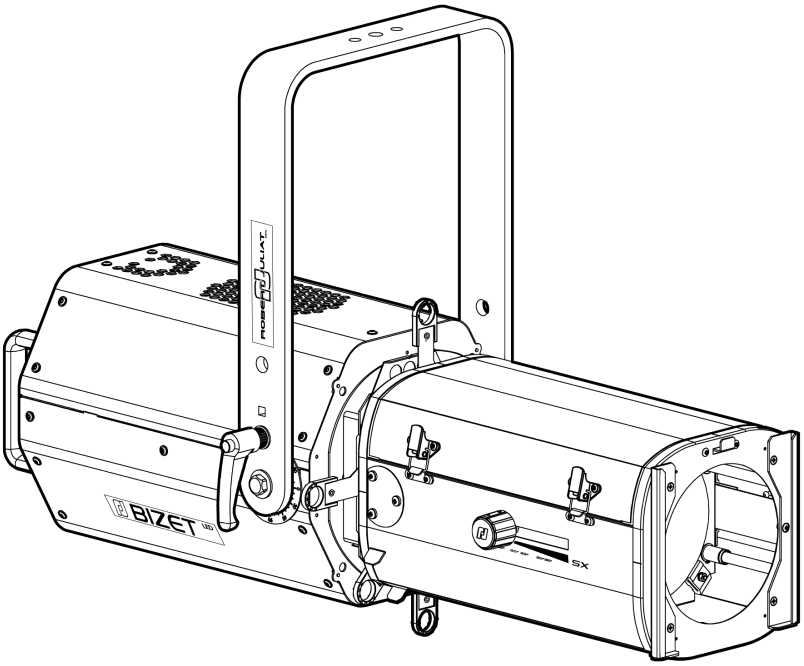

REF	Standard	North American
28 - 54°	673SX VW / CW	673CSX VW / CW
16 - 35°	674SX VW / CW	674CSX VW / CW
11 - 26°	671SX VW / CW	671CSX VW / CW

Product
Updates:

V1

- FIRMWARE: **V4**.x
- RJ-LED2 FIRMWARE PLATFORM (Node Mode) full manual is available for download at **www.robertjuliat.com/LED/PDF_PAGE**

ROBERT JULIAT

DN41242100-A (EN)

Released: 28/01/26

Robert Juliat S.A.S. 32, rue de Beaumont, F 60530 Fresnoy-en-Thelle - phone : +33 (0)3 44 26 51 89 - info@robertjuliat.fr

www.robertjuliat.com

Table of Contents

1 User's instructions 1
2 Presentation 2
2.1 Functions 2
2.2 Identification label 3
2.3 Accessories included 3
2.4 Accessories 4
3 Set-up 5
3.1 Mechanics 5
3.1.1 Operating positions 5
3.1.2 Minimum distance between a flammable material 5
3.1.3 Instructions for use 5
3.1.4 Hanging 5
3.1.5 Safety cable 6
3.2 Electrical information 6
3.2.1 LED source 6
3.2.2 Power supply 6
3.3 DATA 7
3.3.1 DMX 512-A / RDM 7
3.3.2 Art-Net / sACN / DUAL 8
3.3.3 Ethernet / DMX node / DUAL 8
3.4 Accessories 9
3.4.1 Front filter holder 9
3.4.2 Internal filter holder 9
3.4.3 Gobo holder / Iris 10
3.4.4 Optical filter 10
3.4.5 Shutters 11
4 Operations 12
4.1 Light intensity 12
4.1.1 Range 12
4.1.2 Control 12
4.1.3 Parameters 12
4.1.3.1 Dimming resolution - DMX only 12
4.1.3.2 Dimming curve 12
4.1.3.3 Set maximum position 13
4.1.3.4 Dimming mode 13
4.2 Strobe 14
4.2.1 Range 14
4.2.2 Control 14
4.3 CCT adjustment (only for Variable White version) 14
4.3.1 Range 14
4.3.2 Control 14
4.3.3 Parameters 15
4.4 Response time 15
4.4.1 Range 15
4.4.2 Control 15
4.5 Beam size adjustment 16
4.5.1 Range 16
4.5.2 Control 16
4.6 Orientation 16
4.6.1 Range 16
4.6.2 Control 17
4.7 Colour 17
4.8 Beam shaping 18
4.8.1 Range 18
4.8.2 Control 18
4.9 Beam rotation 19
4.9.1 Range 19
4.9.2 Control 19
4.10 Gobo / Optical filter 20
5 Controls and parameters 21
5.1 Local display and controls 21
5.1.1 Display 21
5.1.2 Home screen 21
5.1.3 Menus 22
5.1.4 Parameters 23
5.2 DMX512 - A remote control 24
5.2.1 Protocol 24
5.2.2 Configuration 24
5.2.3 Parameters 25
5.2.3.1 DMX Hold 25
5.2.3.2 FIxture ID 25
5.2.3.3 Terminator 25
5.2.3.4 Node 25
5.2.4 DMX chart 26
5.2.4.1 Variable White version (VW) 26
5.2.4.2 Cool White version (CW) 26
5.2.5 DMX ranges 26
5.2.5.1 Strobe duration 26
5.2.5.2 Strobe speed 26
5.2.5.3 Response time 26
5.2.5.4 Control mode* 27
5.2.6 RDM remote control 28
5.2.6.1 Protocol 28
5.2.6.2 Functions 28
5.3 Home values & Standalone 30
5.4 Network 30
5.4.1 Art-Net remote control 32
5.4.1.1 Protocol 32
5.4.1.2 Configuration 32
5.4.1.3 Local set-up 33
5.4.2 sACN remote control 34
5.4.2.1 Protocol 34
5.4.2.2 Configuration 34
5.4.2.3 Local set-up 35
5.4.3 Dual remote control 36
5.4.3.1 Protocol 36
5.4.3.2 Configuration 36
5.4.3.3 Local set-up 37
5.4.4 Web interface 38
5.4.4.1 Control 38
5.4.4.2 Connection to the Web interface 38
5.4.5 LLRP (Low-Level Reader Protocol) 39
5.5 Fan cooling modes 40
5.5.1 Range 40
5.5.2 Control 40
6 Service 41
6.1 Preventive maintenance 41
6.1.1 Frequency 41
6.1.2 General cleaning 41
6.1.3 General visual check 41
6.1.4 LED source 41
6.1.5 Optics 41
6.1.6 Lamp house cleaning 42
6.2 Analysis 43
6.3 Electronic thermal management system 43
6.4 Firmware update 43
6.5 Factory defaults 44
6.6 Selftest 44

Robert Juliat reserve the right to change or alter any of the items detailed on this page,
to increase or improve manufacturing techniques without prior notice.

1 User's instructions

EN

GENERAL INSTRUCTIONS

1. Not for residential use.
2. These fixtures must only be serviced by a qualified technician.
3. In addition to the instructions indicated on this page, relevant health and safety requirements of the appropriate EU Directives must be adhered to at all times.
4. This fixture is in compliance with section 17 - Lighting appliance for theatre stages, television, cinema and photograph studios.
   Standards NF EN 60598-1, NF EN 60598-2-17, Low Voltage Directive 2014/35/UE & EMC Directive 2014/30/UE.
5. This fixture is rated as IP20, and is for indoor use only.

FIXTURE

6. Ensure fixture is correctly mounted on an appropriate support.
7. Protection screens and lenses must be replaced in the event of any damage, such as cracks or deep scratches, since these might reduce performance.
8. When hung or flown the fixture must be secured by an additional hanging accessory (such as a safety cable or bond) of suitable length.
9. Safety bonds or cables must be securely attached to the back of the fixture and be as short as possible, or rolled up as necessary, to minimise travel distance should the fixture be dislodged.
10. Movable accessories (scroller, etc.) must also be secured with a suitable safety cable or bond at the front of the fixture.
11. The combined weight of both the fixture and the accessories must be considered when choosing the load-bearing capability of safety cable or bond.
12. Do not open lighting fixture when the source is on.
13. WARNING: LED source becomes hot during use. Allow fixture to cool before servicing.
14. Do not tamper with design of fixture nor any of its safety features.
15. Tighten electrical mains cable connections regularly and replace with one of identical specification if damaged.
16. Use only with correct power supply.

VENTILATION

17. Keep well away from flammable material.
18. Not for outdoor use. Do not cover. Do not permit fixture to get wet.
19. To avoid overheating, do not obstruct air vents.
20. Ensure any cooling fans are in correct working order. If fans are not working, turn fixture off immediately and service as necessary.

CLEANING

21. Do not touch the LED source with your fingers.
22. To clean the optical parts, use a soft cloth in combination with distilled water or isopropyl alcohol recommended for coated optics. Do not use any cleaning product that contains solvents or abrasives, as these can cause surface damage. Dry with a soft lint-free cloth.
23. Regularly remove dust with a soft lint-free cloth.
24. If the fixture has filters, they must be cleaned frequently.

POWER SUPPLY

25. Disconnect from the mains before servicing.
26. Mains connection only. Do not connect to "electronic output" such as dimmer.
27. Ensure power supply circuit breakers, always remain accessible.

PLEASE NOTE

This product has been built to conform to European standards relating to professional lighting equipment.
Any modification made to our products will void the manufacturers' warranty.

Risk group 2

CAUTION: Possibly hazardous optical radiation emitted from this product. Do not stare at operating lamp. Maybe harmful to the eye.

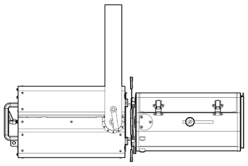

Photobiological safety according to EN62471

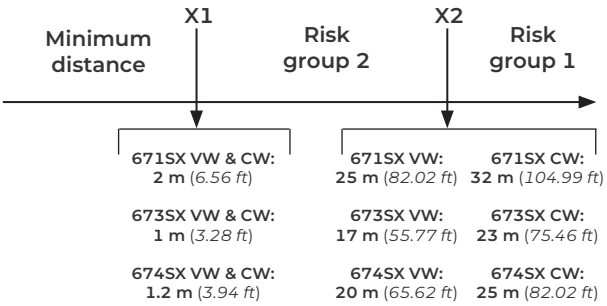

Risk group 2. Luminaires should be positioned so that prolonged staring into luminaire at a distance closer than 25 m (671SX VW), 17 m (673SX VW) & 20 m (674SX VW) is not expected.

Risk group 2. Luminaires should be positioned so that prolonged staring into luminaire at a distance closer than 32 m (671SX CW), 23 m (673SX CW) & 25 m (674SX CW) is not expected.

2 Presentation

2.1 Functions

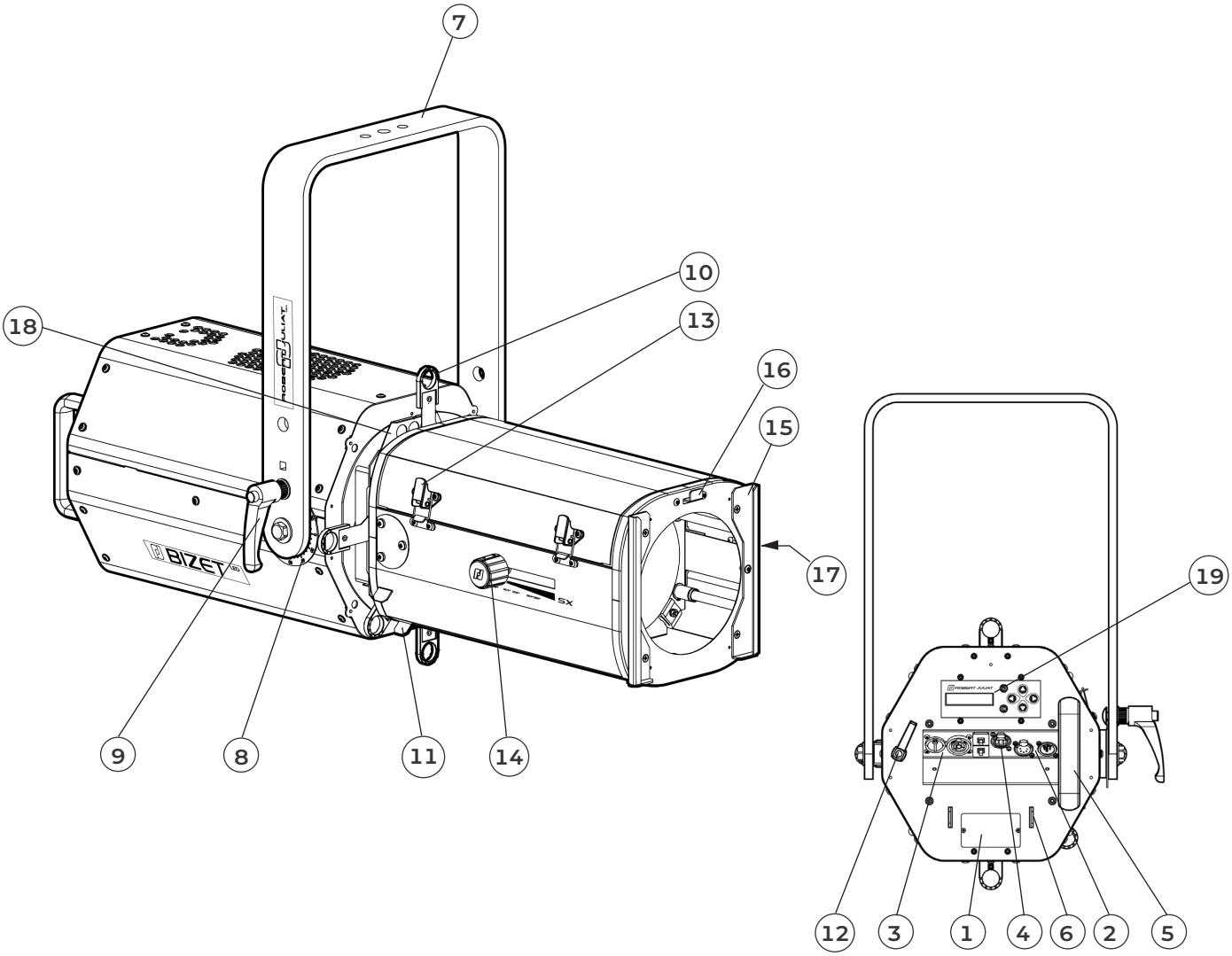

Description	
1. Identification plate 2. Data connector (IN and OUT) 3. Power connector (IN and OUT) 4. RJ45 network connector 5. Handle 6. Safety cable attachment point 7. Hanging yoke 8. Tilt index 9. Tilt locking handle 10. Shutters	11. Shutter locking system 12. Lens tube rotation locking button 13. Lens tube access 14. Zoom adjustment 15. Front slot for accessories and gel frame holder 16. Front slot locking system 17. Focus adjustment 18. Gobo holder 19. Local display and controls

2.2 Identification label

Description

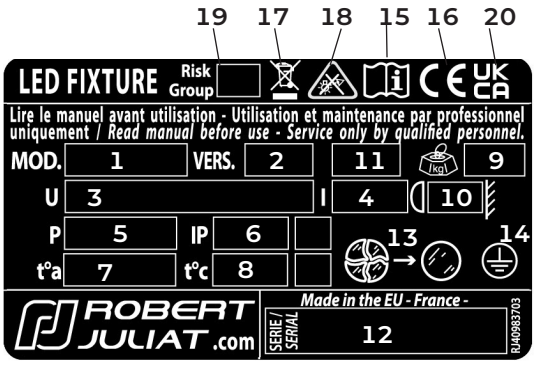

Units:

- Weight	*= kilogram (kg).*
- Intensity	*= Ampere (A).*
- Voltage	*= Volt (V).*
- Frequency	*= Hertz (Hz).*
- Temperature	*= degree Celsius (°C).*

1. MOD. : Model
2. VERS. : Version
3. U : Nominal voltage input (V)
4. I : Nominal intensity (A)
5. P : Maximum power input (W)
6. IP : International Protection Rating
7. t°a : Maximum ambient temperature (°C)
8. t°c : Maximum external temperature of the unit (°C)
9. Net weight (kg)
10. Minimum distance between a flammable material and the lighting unit (m)
11. Colour temperature version
12. Serial number
13. Replace broken glass
14. Class 1 product label
15. Read manual first label
16. European conformity label
17. WEEE directive label
18. CEI-TR-62778 - Do not stare at light source
19. EN62471 - Risk group
20. UKCA (UK Conformity Assessed) label

2.3 Accessories included

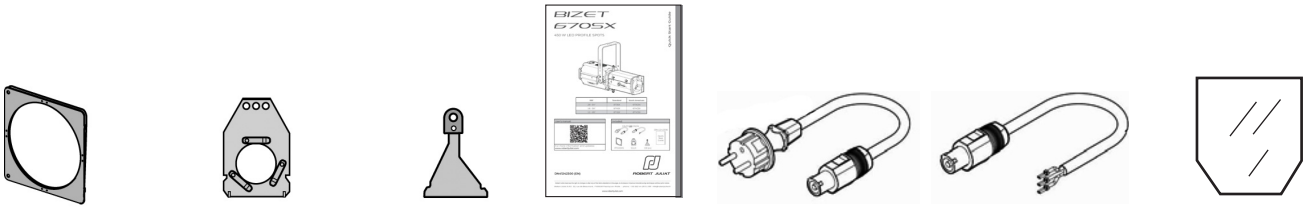

1 2 3 4 5 6 7

	Reference	Description
1	PF500M2	180 x 180 mm (7.1 x 7.1 in) metal filter holder
2	SGUX	Universal A-size gobo holder (metal, glass, frosted glass)
3	D8	Shutters (x4)
4	DN41242300	Quick Start manual
5	CAL03	3 meter power cable (3G1,5 HO7RNF) with Neutrik PowerCon© True1 TOP and CEE 7/7 (2P+T NF/SCHUKO) connectors (standard version)
6	CAL04	1,50m power cable UL/CSA with Neutrik PowerCon© True1 TOP connector (North American version)
7	FO100-10	Optical filter

2.4 Accessories

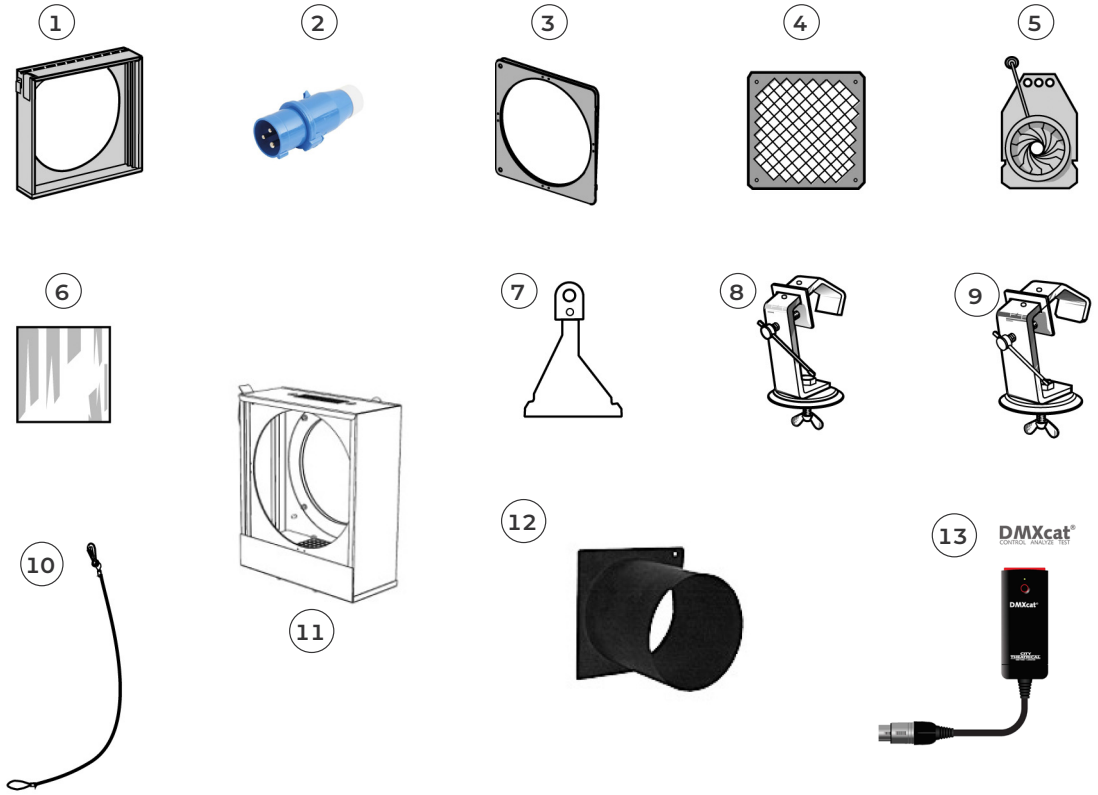

	Reference	Description
1	CAV 600A	Double slot front cassette for 180 x 180 mm accessories
	CAV 600AE	Double slot front cassette for 185 x 185 mm accessories
2	PCP1716A	16A blue 2P+E 6h IEC60309 power connector
3	PF600M2	185 x 185 mm (7.28 x 7.28 in) metal filter holder
4	G500	180 x 180 mm safety grid
5	IWSX755	Drop-in iris (monoplane) with holder
6	VD 120	120x120mm frosted glass
	FO120C-1	120x120mm 1° frost optical filter
	FO120C-10	120x120mm 10° frost optical filter
	FO120C-2	120x120mm 2° frost optical filter
	FO120C-5	120x120mm 5° frost optical filter
7	D8	Shutter
8	876	Hook clamp 40 x 10 mm with 28 mm M10 screw for Ø35 to Ø50 mm pipes
9	880	Hook clamp 40 x 10 mm with 28 mm M10 screw for Ø50 to Ø63 mm pipes
10	CS2	Safety cable Ø3 mm (length = 600 mm)
11	RPF613	180 x 180 mm front extension cassette for 215 x 215 mm accessories without fan (recommended for dark colours on 613SX/663SX)
	RPF613E	180 x 180 mm front extension cassette for 245 x 245 mm accessories without fan (recommended for dark colours on 613SX/663SX)
12	TH600	180 x 180 mm "Top hat" (without safety cable)
13	DMXcat	Bluetooth DMX/RDM Multifunction test tool - City Theatrical DMXcat®

3 Set-up

3.1 Mechanics

3.1.1 Operating positions

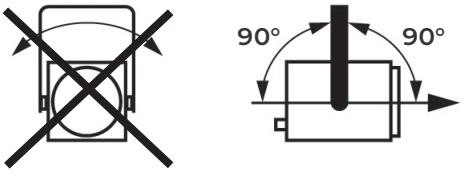

3.1.2 Minimum distance between a flammable material and the lighting unit

3.1.3 Instructions for use

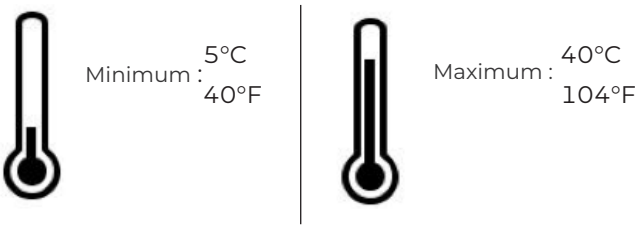

IP20 - Indoor use only

3.1.4 Hanging

- Ensure fixture is correctly mounted on an appropriate support

Net weight:
673SX / CSX = 19.2 kg (*42.2 lbs*)
674SX / CSX = 20.8 kg (*45.8 lbs*)
671SX / CSX = 21 kg (*46.2 lbs*)

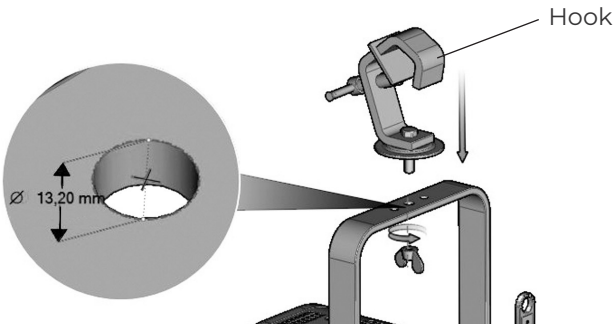

3.1.5 Safety cable

- When hung or flown the fixture must be secured by an additional hanging accessory (such as a safety bond or cable) of suitable length.
- The combined weight of both the fixture and the accessories must be considered when choosing the load-bearing capability of safety cable or bond.
- Safety cables or bonds must be securely attached to the back of the fixture and be as short as possible, or rolled up as necessary, to minimise travel distance should the fixture be dislodged.

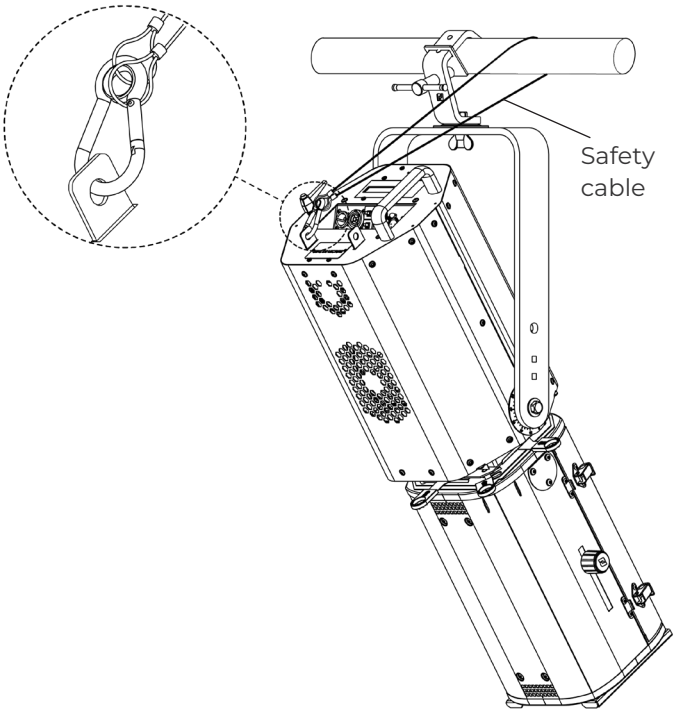

3.2 Electrical information

3.2.1 LED source

Never touch or scratch the LED surface.
See 6.1.4 **LED cleaning procedure if cleaning is necessary.**

3.2.2 Power supply

Power supply				
Voltage	**Frequency**	**Input power (VW)**	**Input power (CW)**	**Connectors**
VW: 90 ➡ 277 V CW: 190 ➡ 277 V	47-63 Hz	2.72 A / 591 W @ 230 V 5.60 A / 606 W @ 110 V 6.19 A / 610 W @ 100 V Max: 7 A Standby mode: 9.2 W	3.22 A / 705 W @ 230 V 3.04 A / 704 W @ 245 V 3.53 A / 704 W @ 208 V Max: 3.83 A Standby mode: 8.2 W	Neutrik powerCON TRUE1 TOP Input : ref. NAC3FPX-TOP
⏚	• Class 1 product. **This luminaire must be earthed.** • Must be connected directly to AC power. **Do not connect to dimmer power.** • Automatic mains voltage detection.			

Daisy chain (with delivered power cable):

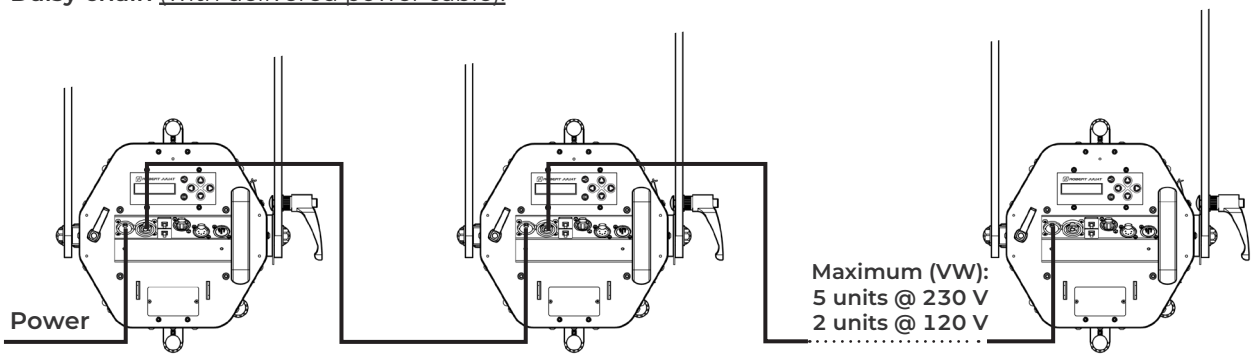

Power cable						
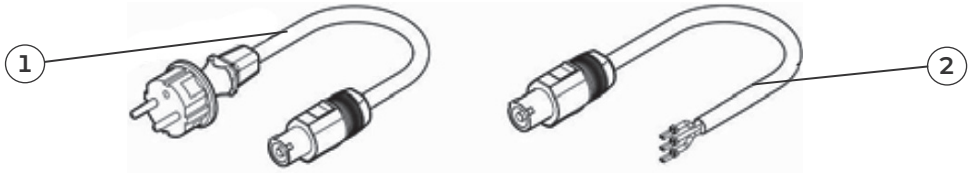						
Power cable		**Connector**	**Mains plug**	**Cable type**	**Cable length**	**Wiring**
1	Standard version	Neutrik® powerCON TRUE1 TOP NAC3FX-W-TOP	CEE7/7	3G1.5 H07RNF	3 m 9.8 ft	Live: Brown Neutral: Blue Ground: Yellow/Green
2	North American version		-	14AWG SJ TYPE (UL/CSA)	1.5 m 4.9 ft	Live: Black Neutral: White Ground: Green
In 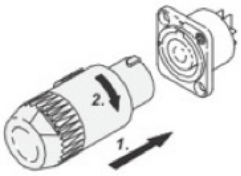				Out 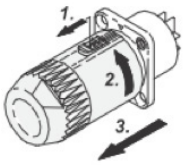		

3.3 DATA

3.3.1 DMX 512-A / RDM

Protocol	Input connector	Output connector
USITT DMX 512-A RDM	XLR 5-pin	XLR 5-pin

DATA connectors			
PIN #	**DMX**	**Description**	
1	Shielding	Foil & Braided Shield	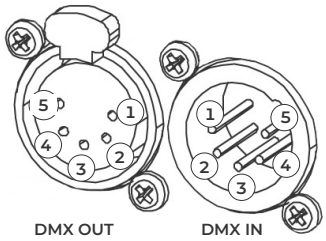
2	DMX (-)	1st conductor of 1st twisted pair	
3	DMX (+)	2nd conductor of 1st twisted pair	
4	Not used	1st conductor of 2nd twisted pair	
5	Not used	2nd conductor of 2nd twisted pair	

Daisy chain:

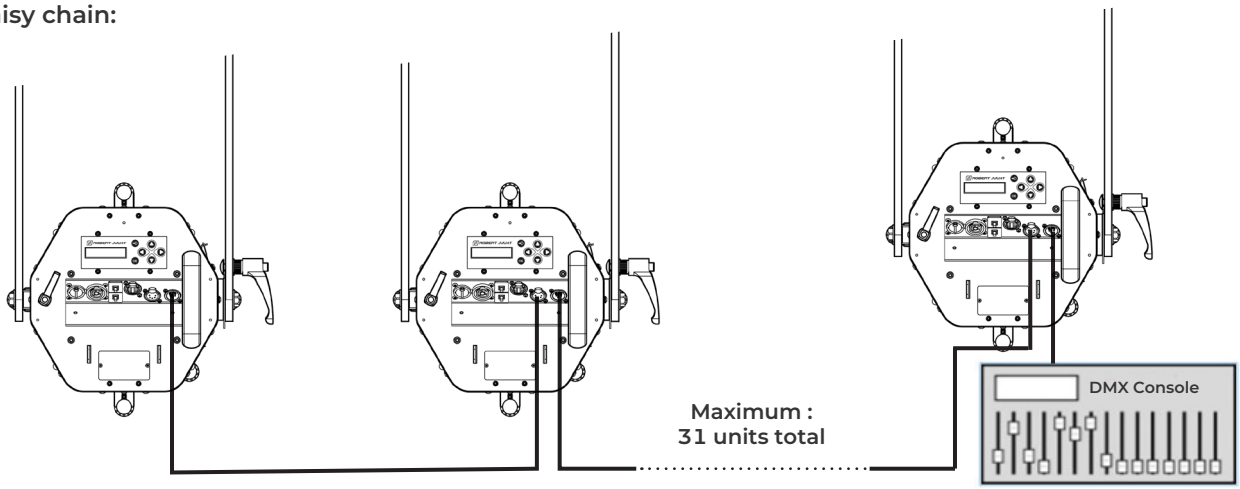

3.3.2 Art-Net / sACN / DUAL

Protocol	Input connector	Output connector
Art-Net (V3 & V4) sACN DUAL (SACN + Art-Net)	RJ45	-

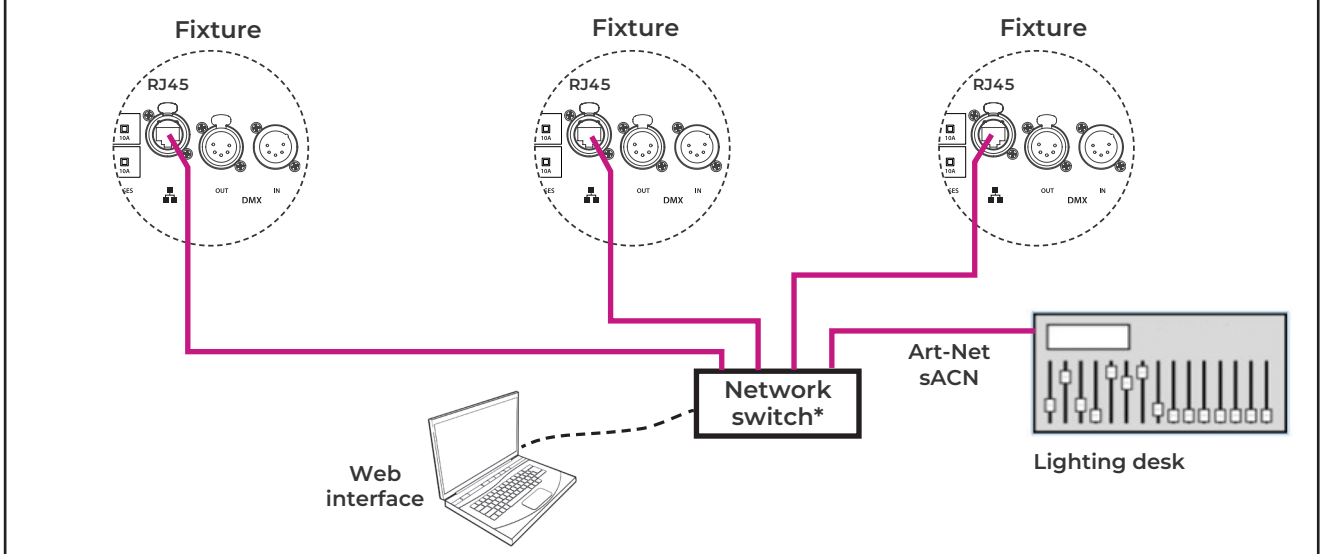

(*) A 1000 base-T switch that supports IGMP (Internet Group Management Protocol) is necessary if the unit is connected to a network switch to control multiple devices. The usage of non IGMP switch capability can cause erratic behavior of all connected devices.
For further reading: https://en.wikipedia.org/wiki/Internet_Group_Management_Protocol

3.3.3 Ethernet / DMX node / DUAL

Protocol	Input connector	Output connector
Art-Net (V3 & V4) sACN DUAL (SACN + Art-Net)	RJ45	DMX

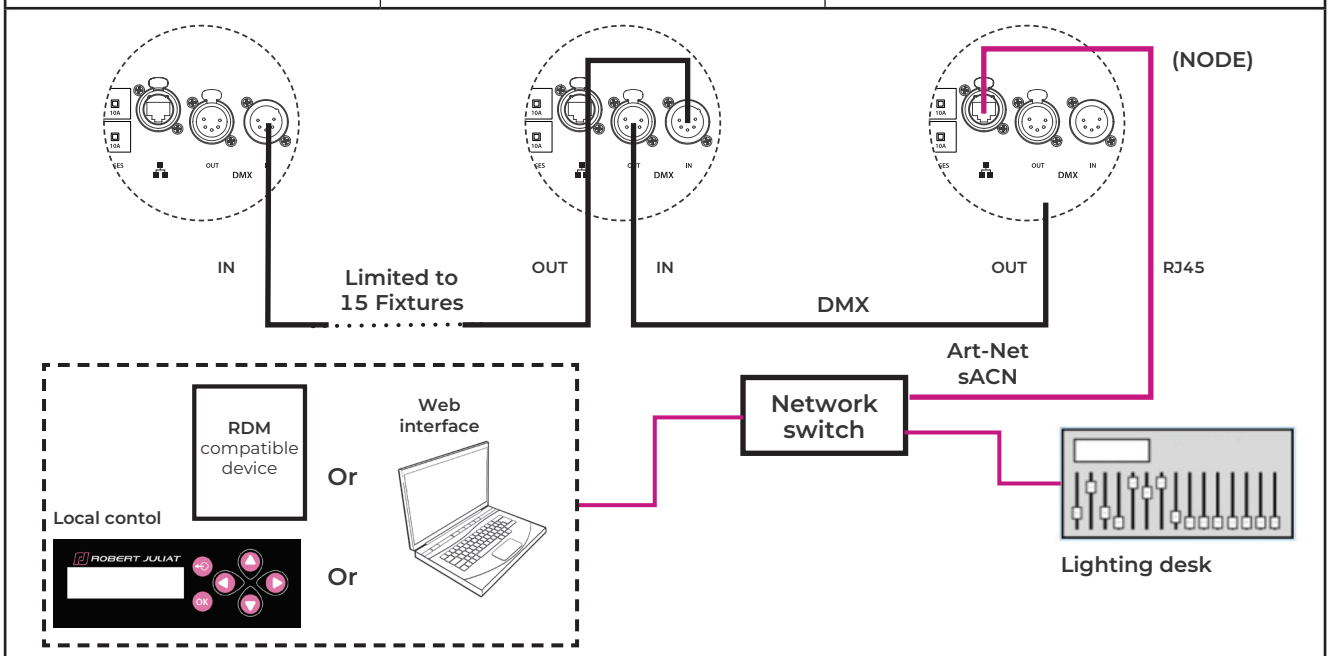

- **Node** function must be activated only on the first unit of the daisy chain (see **Web Interface** section of the manual).
- **Web interface** is always available regardless of the protocol (**Art-Net/sACN**) selected.

RJ-LED2 FIRMWARE PLATFORM (Node Mode) full manual is available for download at **www.robertjuliat.com/LED/PDF_PAGE**

3.4 Accessories

3.4.1 Front filter holder

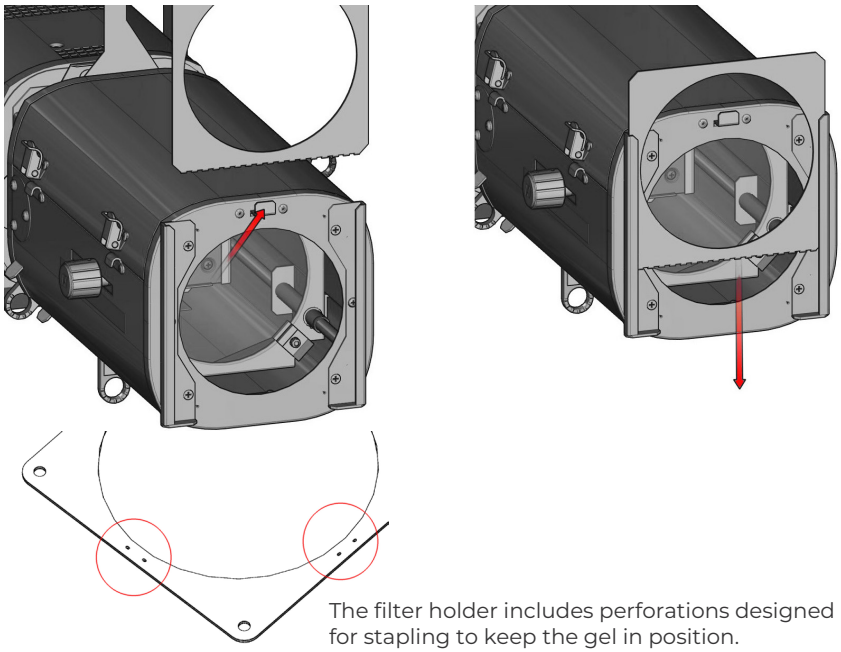

The filter holder includes perforations designed for stapling to keep the gel in position.

For filter dimensions, see section **4.7**

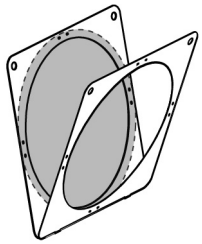

3.4.2 Internal filter holder

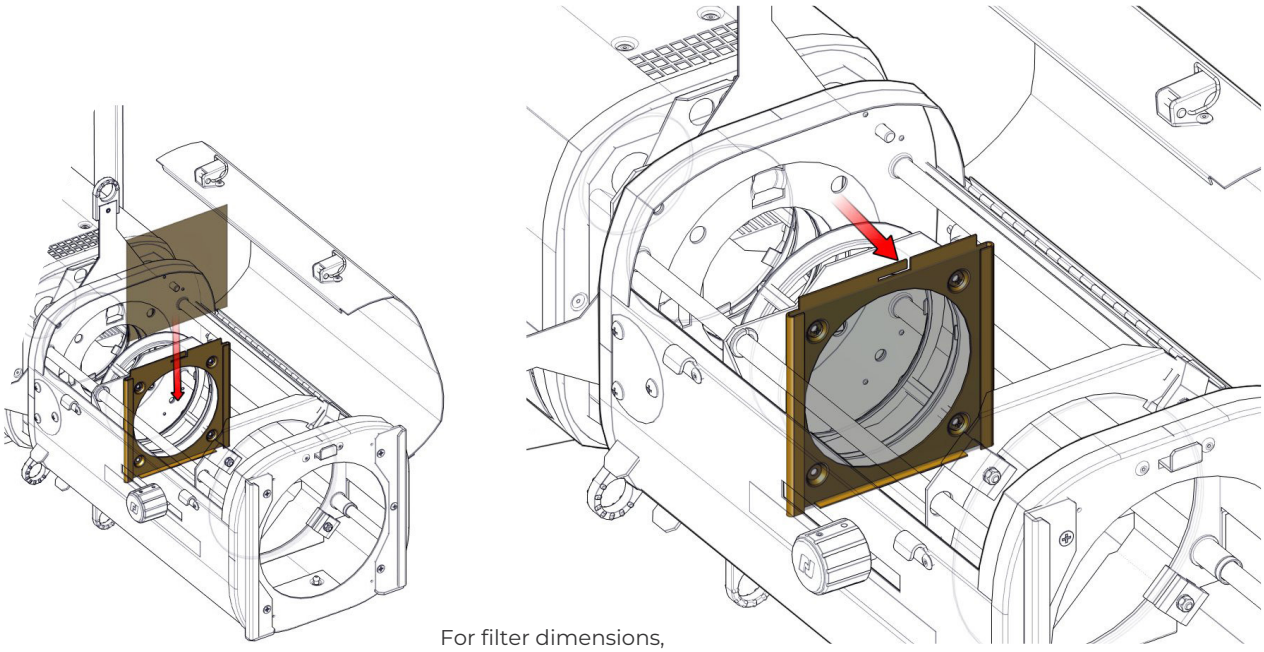

For filter dimensions, see section **4.7**

3.4.3 Gobo holder / Iris

For gobo dimensions,
see section **4.10**

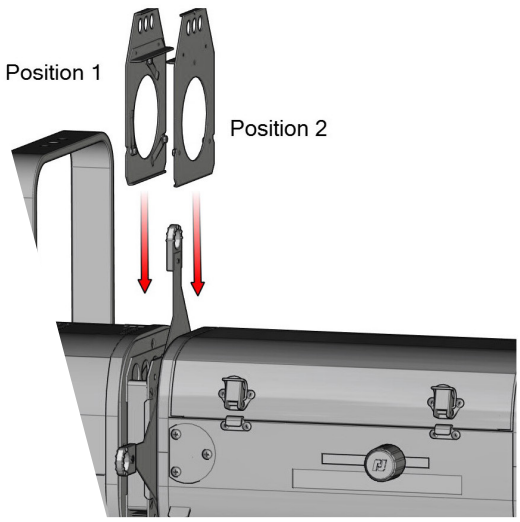

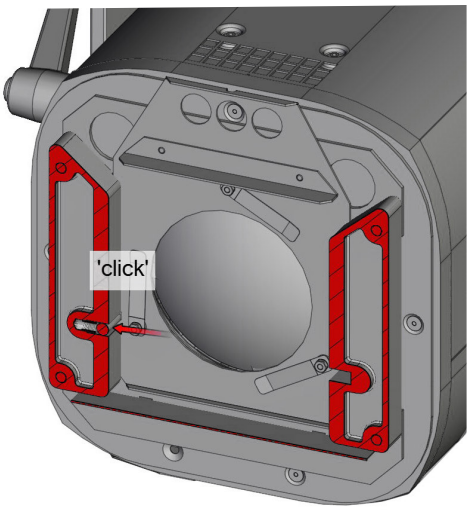

3.4.4 Optical filter

For filter dimension,
see section **4.10**

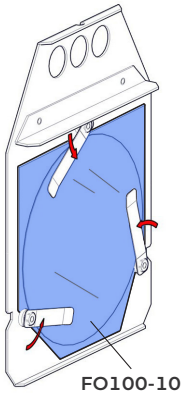

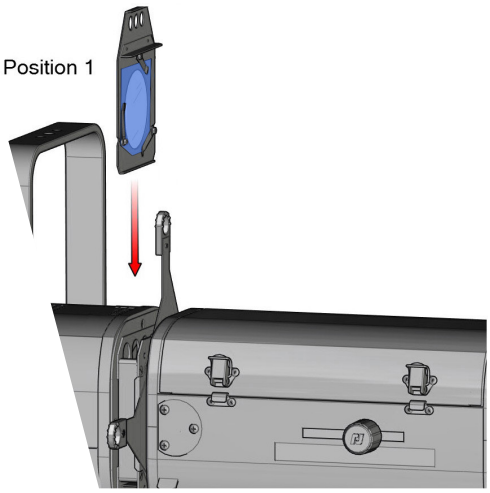

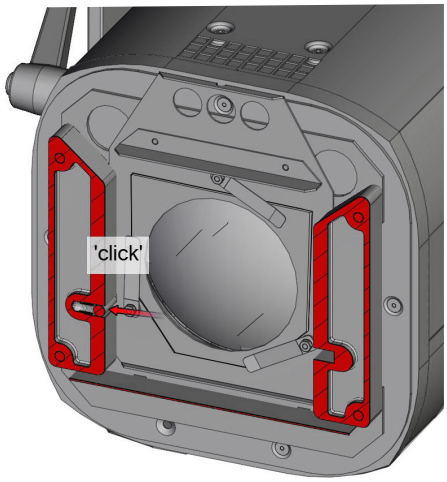

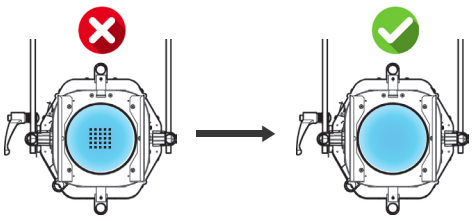

3.4.5 Shutters

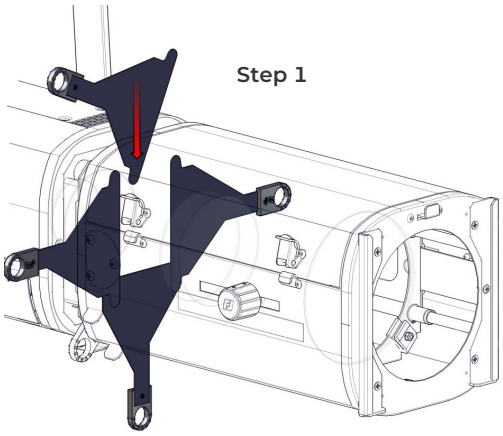

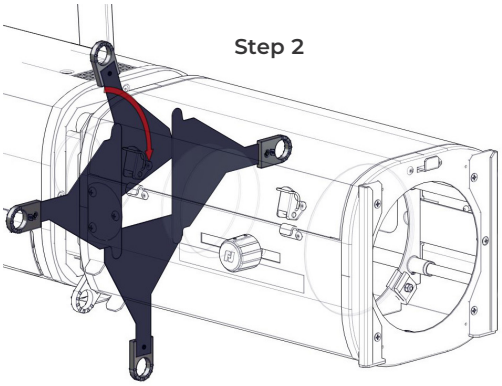

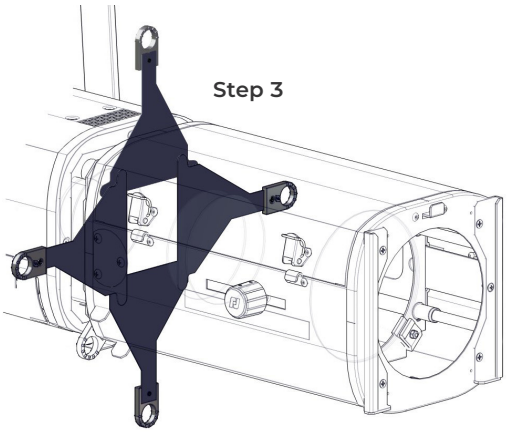

4 Operations

4.1 Light intensity

4.1.1 Range

4.1.2 Control

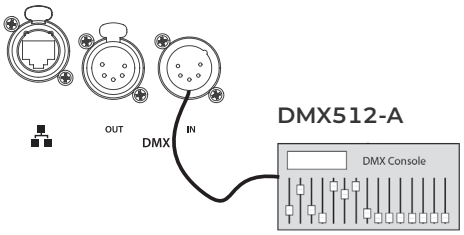

➡ Remotely with DMX512-A / Art-Net / sACN / Dual protocols

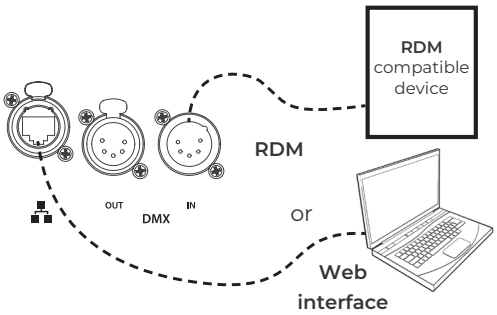

➡ Set through standalone mode and the RDM protocol or web interface
See **5.3 Home Values**

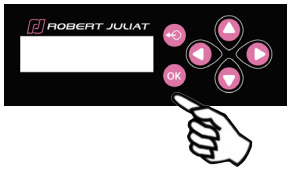

➡ Locally via Standalone mode
See **5.3 Home Values**

Focus mode: when standby screen displayed,
Push Exit or the upper arrow button for 3 secs ➡ Light output = 100% for 1 minute
2x times Exit or the upper arrow button ➡Light output = 0%

4.1.3 Parameters

4.1.3.1 Dimming resolution - DMX only

➡ Set through RDM protocol, web interface or local control

Resolution	DMX mode (VW)	DMX mode (CW)
8 bits – 255 steps	1 - 3	1
16 bits – 65 535 steps	2 - 4	2

4.1.3.2 Dimming curve

➡ Set through RDM protocol, web interface or local control

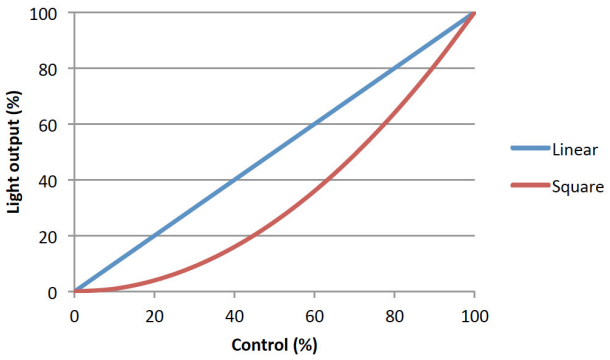

4.1.3.3 Set maximum position

➡ Set through RDM protocol, web interface or local control

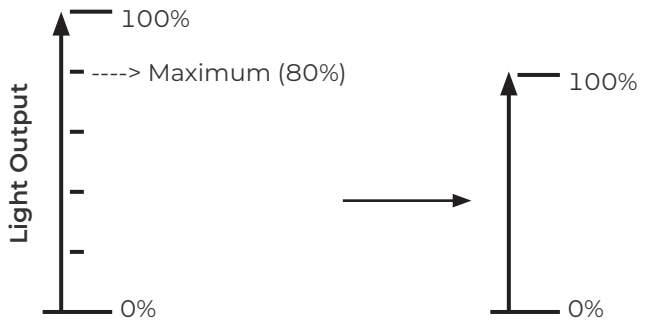

4.1.3.4 Dimming mode

➡ Set through RDM protocol, web interface or local control

Mode	Result
Without PWM	Flicker-Free, perfect for filming
PWM 17 kHz	Good dimming quality (Default Value)
PWM 3,2 kHz	Very good dimming

4.2 Strobe

4.2.1 Range

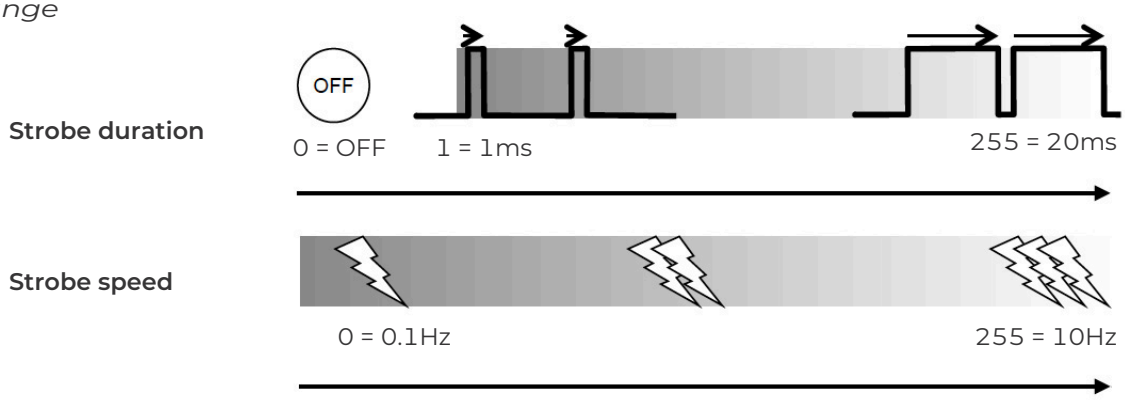

4.2.2 Control

➡ Remotely with DMX512-A / Art-Net / sACN / Dual protocols.
Mode 2 – 4 (VW) / Mode 2 (CW)

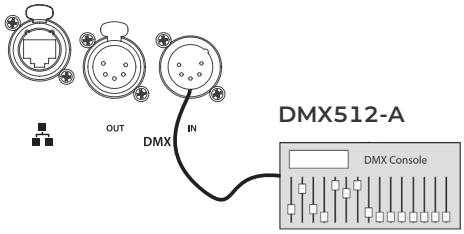

4.3 CCT adjustment (only for Variable White version)

4.3.1 Range

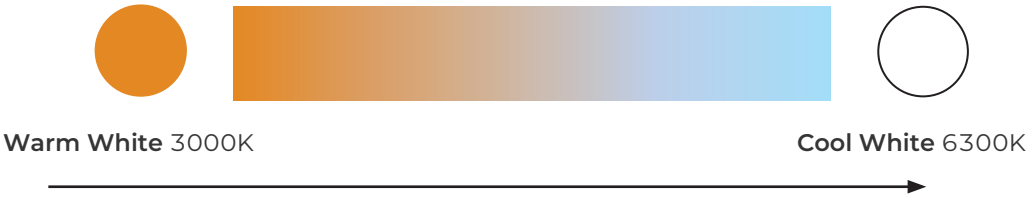

4.3.2 Control

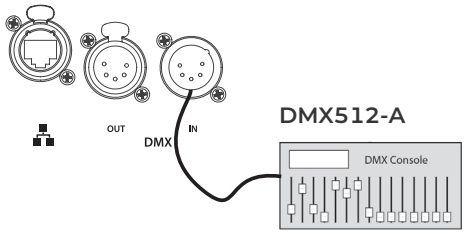

➡ Remotely with DMX512-A / Art-Net / sACN / Dual protocols + Mode 3 – 4

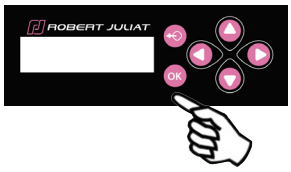

➡ Locally via Standalone mode
See **5.3 Home Values**

Focus mode: when standby screen displayed,
Push Exit or the upper arrow button for 3 secs ➡ Light output = 100% for 1 minute
2x times Exit or the upper arrow button ➡Light output = 0%

4.3.3 Parameters

Mode	Range	Consistency
Calibrated (default)	3000K → 6300K	Same colour on every fixture
Extended	2700 ± 50K → 7000 ± 300K	Slight colour difference can be seen

4.4 Response time

4.4.1 Range

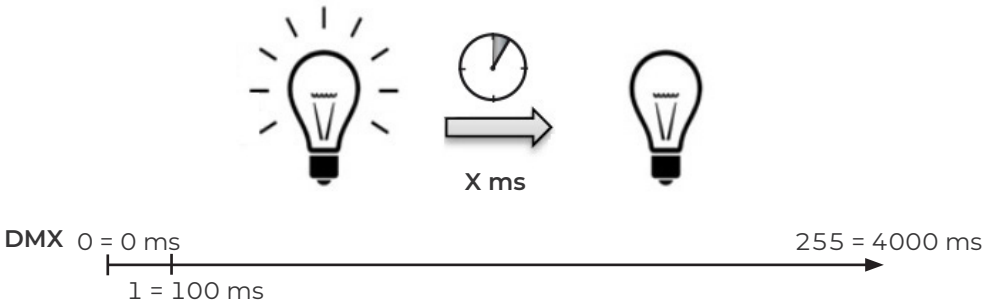

4.4.2 Control

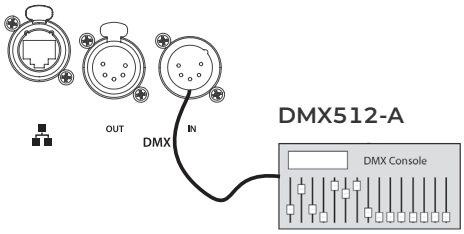

Remotely, with
DMX512-A / Art-Net / sACN / Dual protocols
Mode 2 – 4 only (VW) / Mode 2 only (CW)

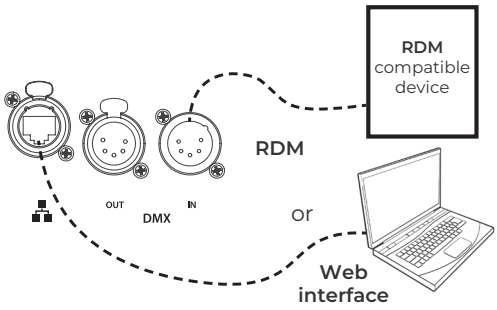

➡Set through RDM protocol or web interface

Mode 1 – 3 (VW) Mode 1 (CW)

Mode	Speed
NONE	OFF
SLOW	700 ms
MEDIUM	470 ms
FAST	350 ms
CUSTOM	0 - 4000 ms

see **5.3 Home Values**

Locally

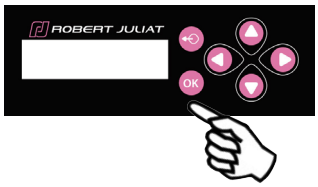

➡selection in SETUP/DIMMER/ **RESPONSE TIME**

Mode 1 – 3 (VW) Mode 1 (CW)

Mode	Speed
NONE	OFF
SLOW	700 ms
MEDIUM	470 ms
FAST	350 ms
CUSTOM	0 - 4000 ms

see **5.3 Home Values**

4.5 Beam size adjustment

4.5.1 Range

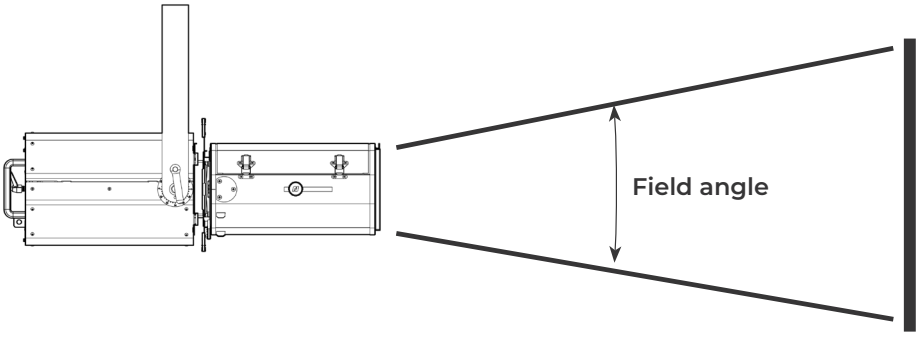

Model	Minimum angle	Maximum angle
673SX / 673CSX	28°	54°
674SX / 674CSX	16°	35°
671SX / 671CSX	11°	26°

4.5.2 Control

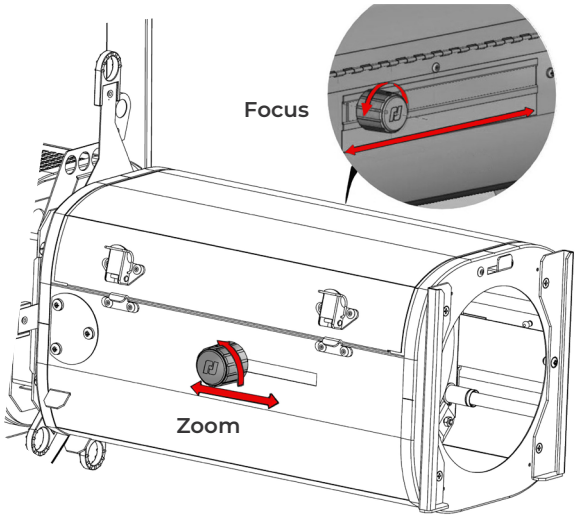

4.6 Orientation

4.6.1 Range

Function	Range
PAN	0 ➡ 360°
TILT 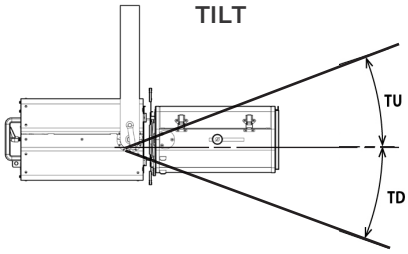	TU = 0 ➡ 60° TD = 0 ➡ 90°

PAN	TILT
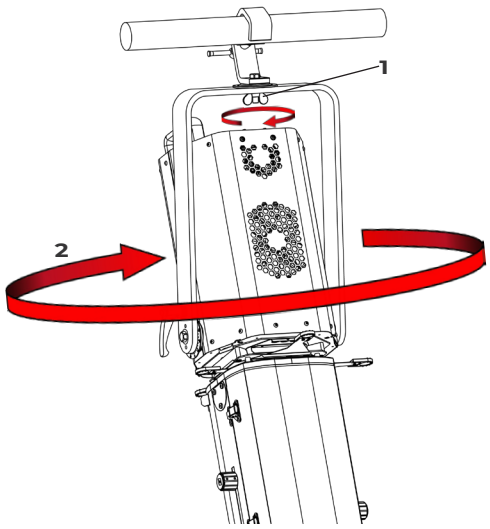	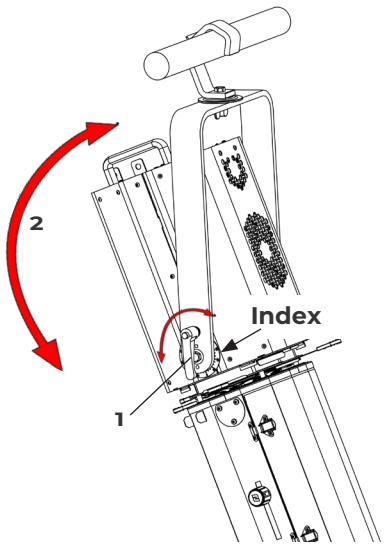

4.7 Colour

Fixed colour:

Location	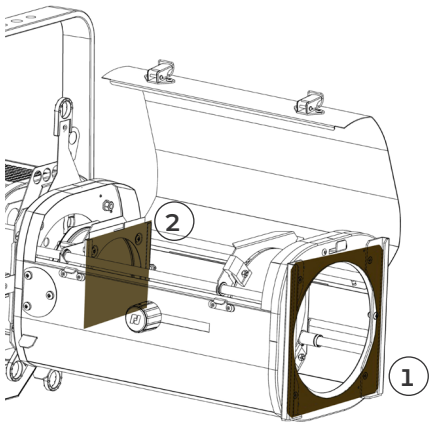	
	1. Front filter holder	**2. Internal filter holder**
Type	Standard coloured gel filter	Frosted or dichroic glass
Dimensions	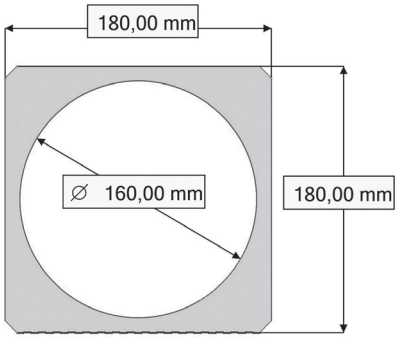	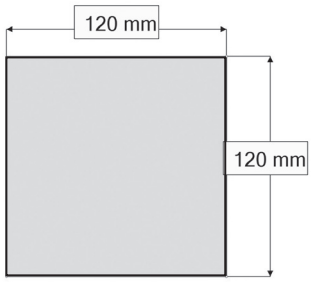
Installation	*See 3.4.1*	*See 3.4.2*

4.8 Beam shaping

4.8.1 Range

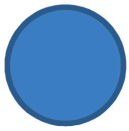	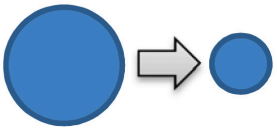
Open	Iris

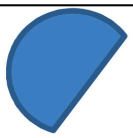			
1 shutter	2 shutters	3 shutters	4 shutters
	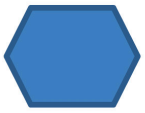		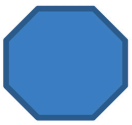
5 shutters	6 shutters	7 shutters	8 shutters

4.8.2 Control

Locking shutter system	
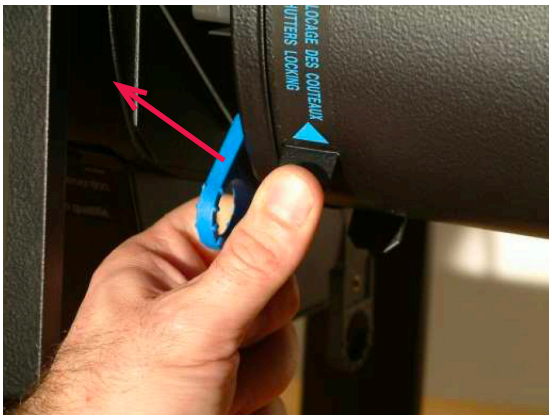	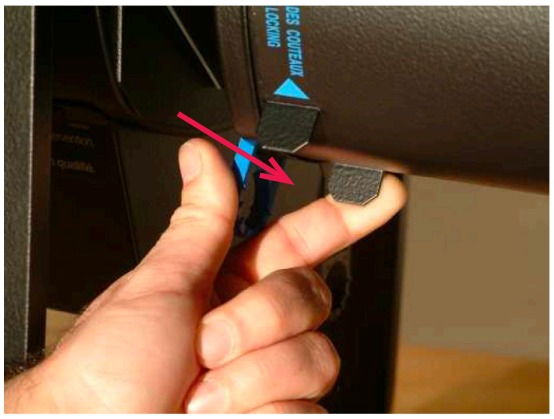
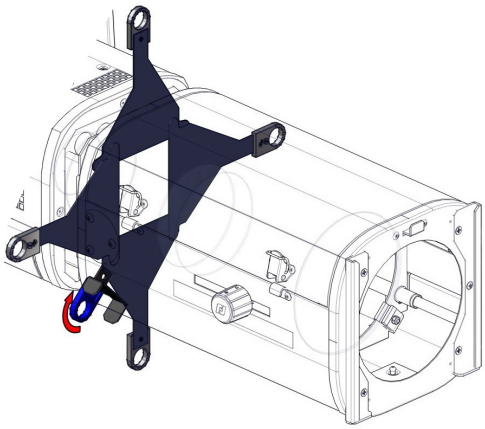	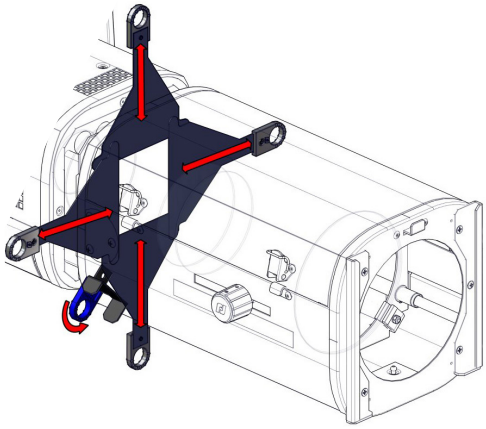
Locked	**Unlocked**

See 3.4 **Accessories** for gobo, iris and additional shutters installation

4.9 Beam rotation

4.9.1 Range

Function		Range
		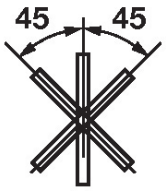
Gobo	Shutters	

4.9.2 Control

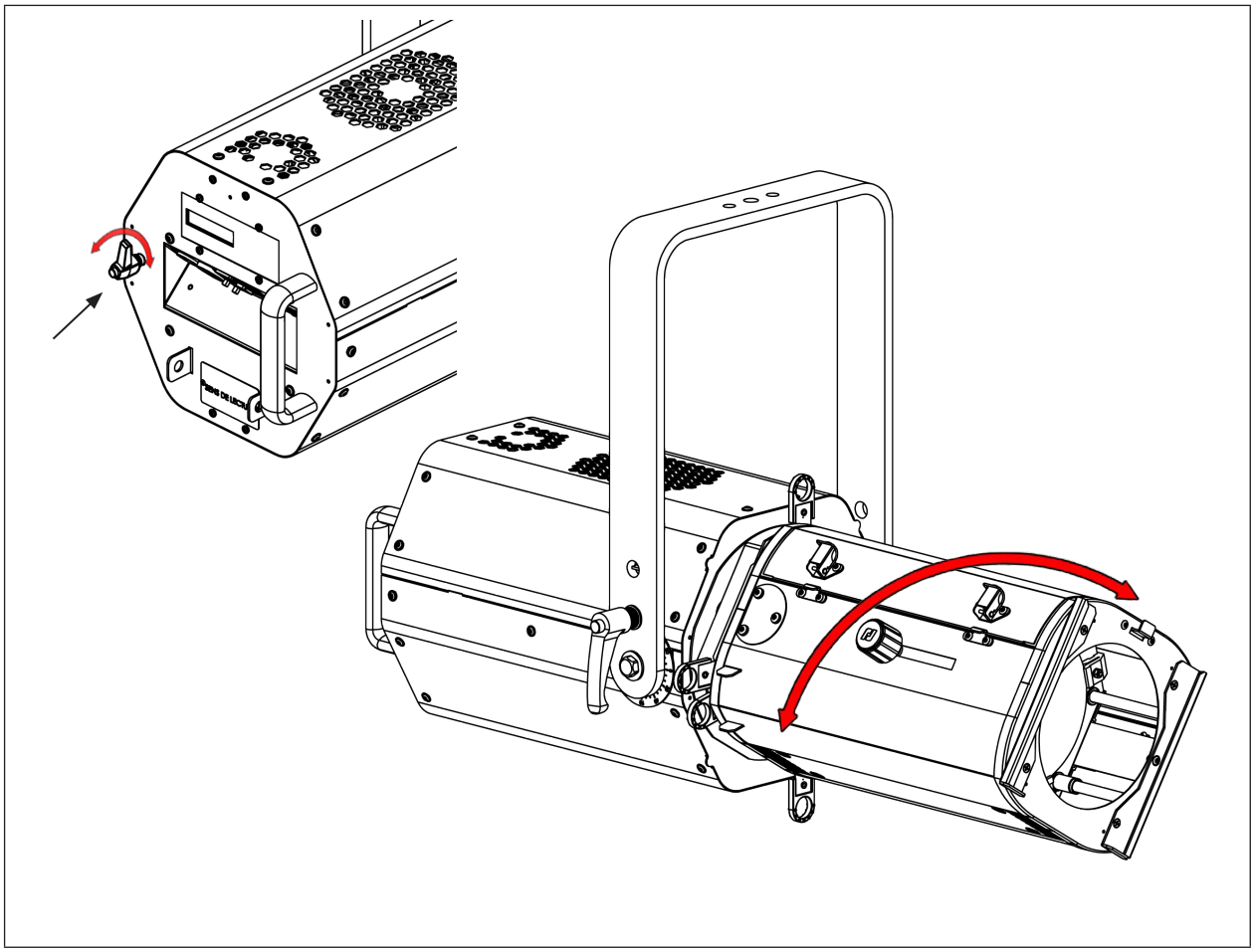

4.10 Gobo / Optical filter

Location	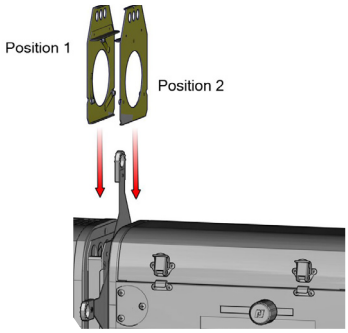	
Type	Metal / Glass	
	A-size 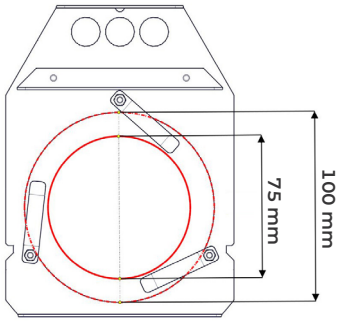	
Gobo installation	**Position 1** 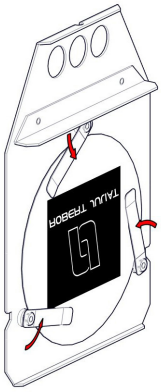	**Position 2** 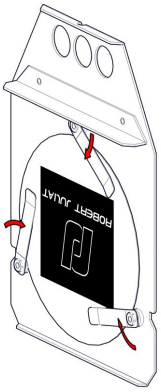
Optical filter installation	**Position 1** 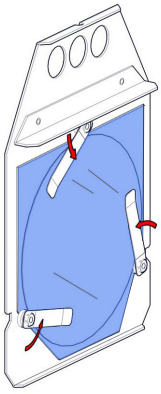	

5 Controls and parameters

5.1 Local display and controls

5.1.1 Display

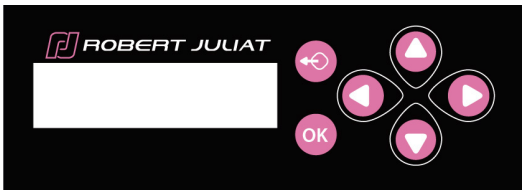

	Function
	Exit the current menu option and/or go back
OK	Enter the current menu option and/or valid
	Scroll through menus and/or Increase data value
	Scroll through menus and/or Decrease data value
	Scroll through menus and/or Increase data value
	Scroll through menus and/or Decrease data value

5.1.2 Home screen

Display	Mode	Description
DUAL : NO HOLD LAST NO DMX DIMMER: 00-CCT: 3000K	**Home**	Main display (home screen)
Diagnostic Nothing to report	x1 push	Diagnostics
Link status : NOK DHCP : OFF IP 192.168.000.013 MASK 255.255.255.000 GW 192.168.000.001	x1 push	Network information
FOCUS MODE Remaining... 59s	**Press** 3 secs.	FOCUS mode

5.1.3 Menus

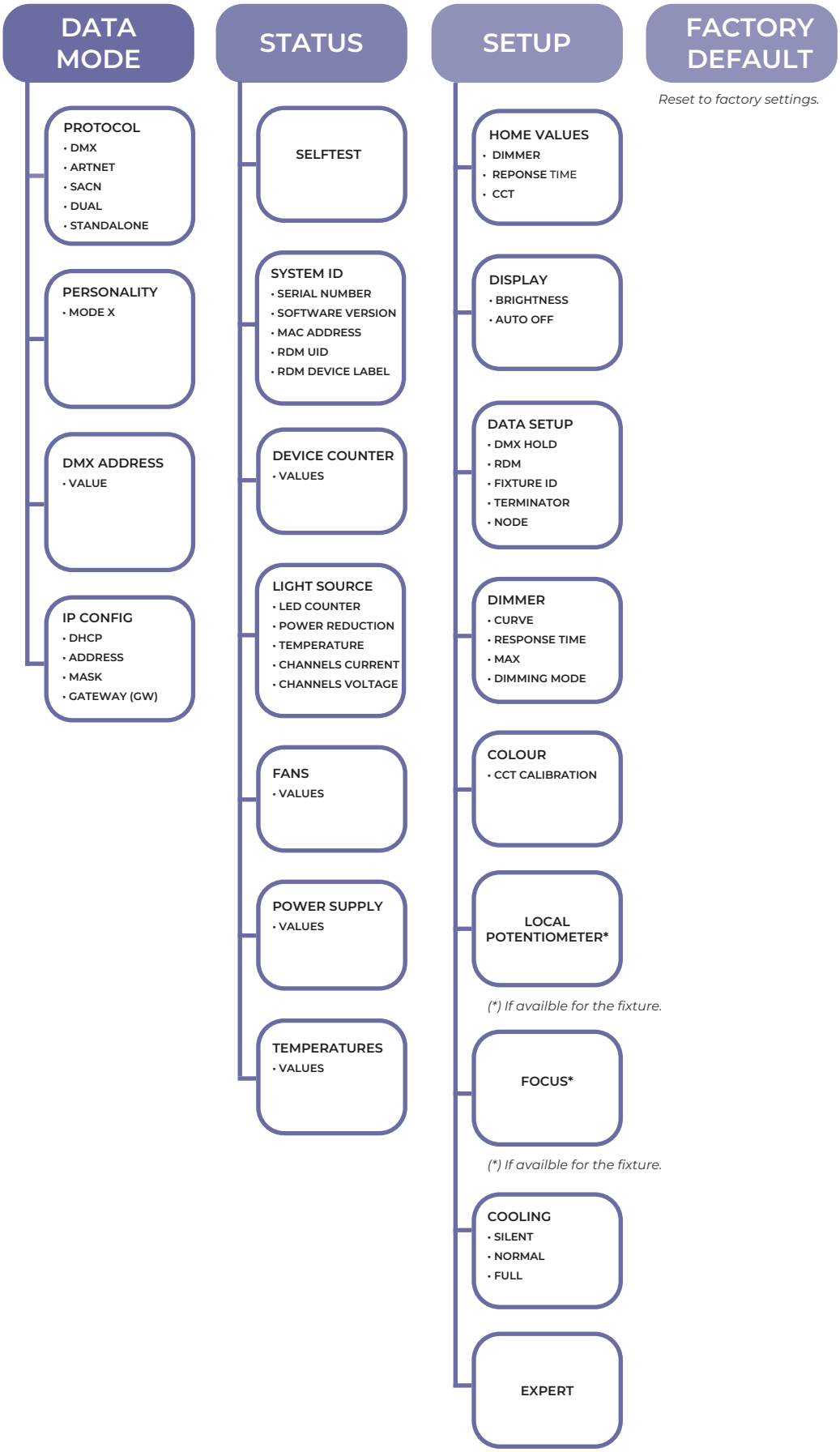
DATA MODE
PROTOCOL
• DMX
• ARTNET
• SACN
• DUAL
• STANDALONE
PERSONALITY
• MODE X
DMX ADDRESS
• VALUE
IP CONFIG
• DHCP
• ADDRESS
• MASK
• GATEWAY (GW)
STATUS
SELFTEST
SYSTEM ID
• SERIAL NUMBER
• SOFTWARE VERSION
• MAC ADDRESS
• RDM UID
• RDM DEVICE LABEL
DEVICE COUNTER
• VALUES
LIGHT SOURCE
• LED COUNTER
• POWER REDUCTION
• TEMPERATURE
• CHANNELS CURRENT
• CHANNELS VOLTAGE
FANS
• VALUES
POWER SUPPLY
• VALUES
TEMPERATURES
• VALUES
SETUP
HOME VALUES
• DIMMER
• REPONSE TIME
• CCT
DISPLAY
• BRIGHTNESS
• AUTO OFF
DATA SETUP
• DMX HOLD
• RDM
• FIXTURE ID
• TERMINATOR
• NODE
DIMMER
• CURVE
• RESPONSE TIME
• MAX
• DIMMING MODE
COLOUR
• CCT CALIBRATION
LOCAL POTENTIOMETER*
(*) If availble for the fixture.
FOCUS*
(*) If availble for the fixture.
COOLING
• SILENT
• NORMAL
• FULL
EXPERT
FACTORY DEFAULT
Reset to factory settings.

➡ Selection in menu: **SETUP / DISPLAY**

Display	Function	Description
SETUP DISPLAY BRIGHTNESS Brightness: 40% Bightness Auto-Off	**Brightness**	Adjust the intensity of the screen To change value, press buttons:
SETUP DISPLAY AUTO OFF Always on Timer without warning	**Auto-OFF**	To keep the main display (home screen) always ON, select : **Always ON** Timer without warning Timer with warning 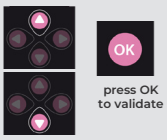 Main display turns OFF after 20 seconds

5.2 DMX512 - A remote control

5.2.1 Protocol

E1.11 – 2008, USITT DMX512-A

5.2.2 Configuration

Set mode through web interface
(***see 5.9* Web interface**)

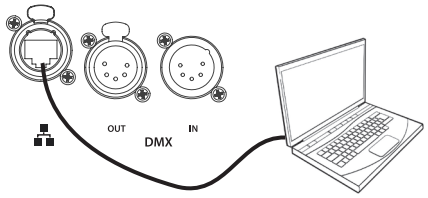

Set mode through RDM protocol

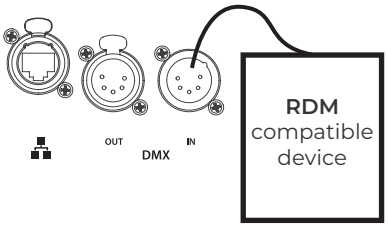

Local control

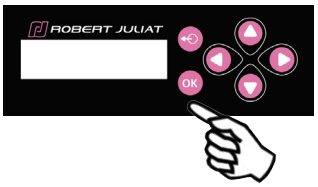

1 - Set DMX address
2 - Set personality mode (***see 5.2.4.* DMX chart**)

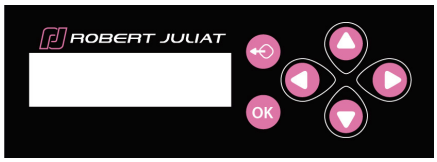

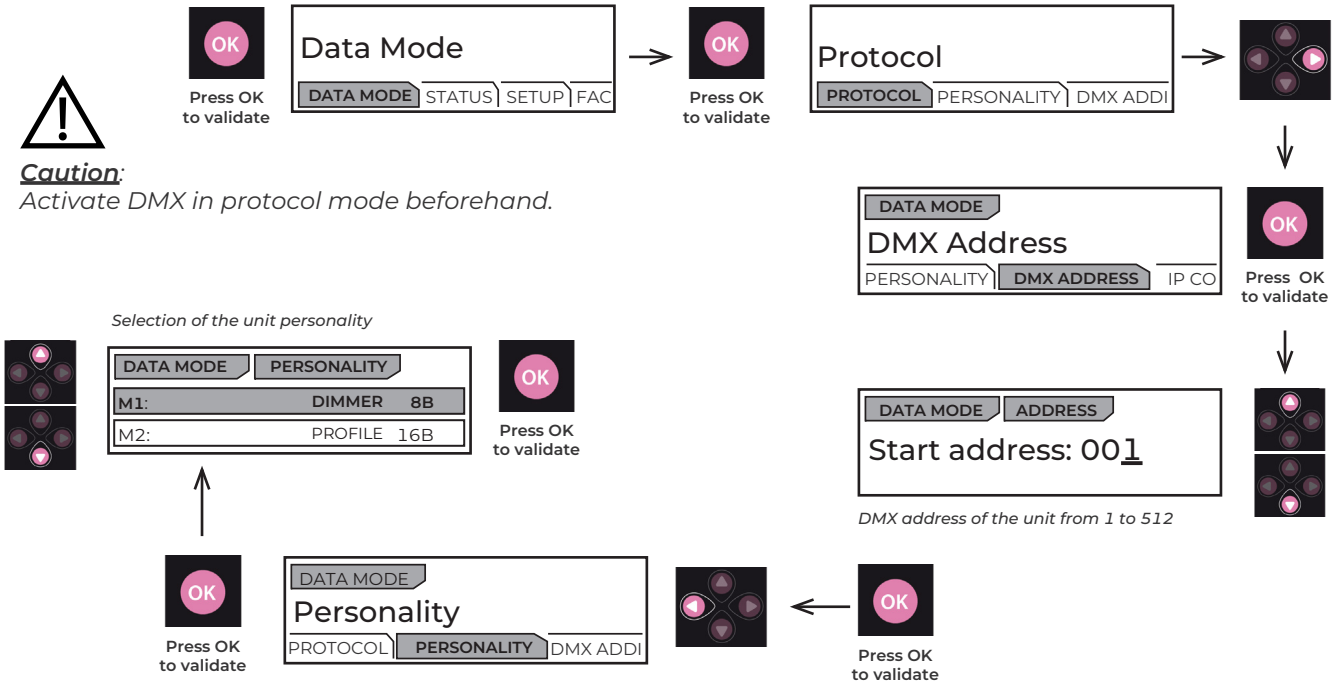

Caution:
Activate DMX in protocol mode beforehand.

5.2.3 Parameters

5.2.3.1 DMX Hold

➡ Selection in **SETUP / Data Setup / DMX HOLD** menu

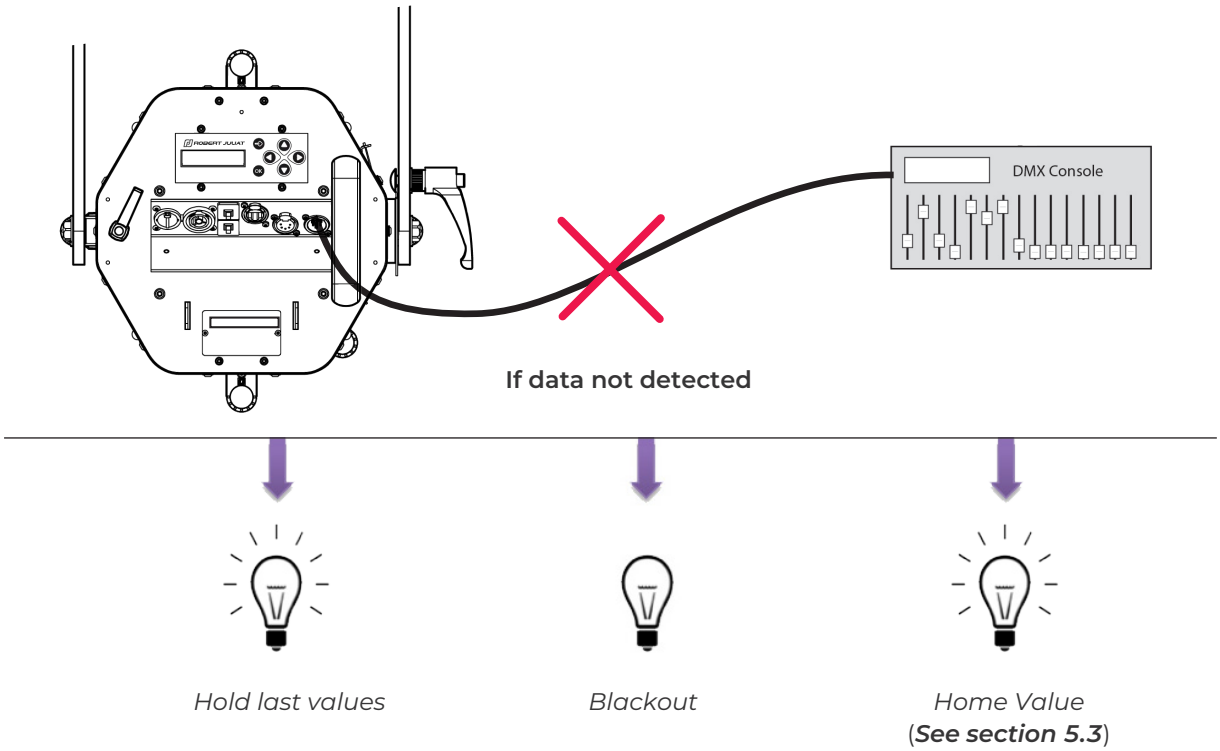

5.2.3.2 FIxture ID

➡ Selection in **SETUP / DATA SETUP / FIXTURE ID** menu

Fixture ID can be set through **web interface** or **RDM** protocol or **local control**

Each unit can be identified by a Fixture ID number
– Once defined, the Fixture ID is displayed on the Home screen.

Example: Installation with 6 units						
Home screen information	ID1 @ 101	ID2 @ 123	ID3 @ 145	ID4 @ 167	ID5 @ 189	ID6 @ 211
Fixture ID	1	2	3	4	5	6
DMX address	101	123	145	167	189	211

5.2.3.3 Terminator

Mode: Auto
A resistor of 120R is automatically connected to terminate the DMX line as the RS485 standard specifies.

5.2.3.4 Node

On sACN/ArtNet/Dual mode we have the possibility to transmit a DMX/RDM signal protocol on the DMX port (Output). The selection can be done through the menu/Webpage/RDM.

On Dual mode (sACN/ArtRdm) the node feature is automatically selected.

5.2.4 DMX chart

5.2.4.1 Variable White version (VW)

DMX Channel	Mode 1: Dimmer 8B	Mode 2: Dimmer 16B	Mode 3: Profile 8B CCT	Mode 4: Profile 16b CCT
1	Dimmer	Dimmer	Dimmer	Dimmer
2		Dimmer fine	CCT	Dimmer fine
3		Strobe duration		Strobe duration
4		Strobe speed		Strobe speed
5		Response time		Response time
6		Control mode		Control mode
7				CCT
8				CCT fine

5.2.4.2 Cool White version (CW)

DMX Channel	Mode 1: Dimmer 8B	Mode 2: Dimmer 16B
1	Dimmer	Dimmer
2		Dimmer fine
3		Strobe duration
4		Strobe speed
5		Response time
6		Control mode

5.2.5 DMX ranges

5.2.5.1 Strobe duration

Range min	Range max	Function
0	0	Strobe OFF
1	255	Strobe ON - 1 ms ➡ 20 ms

5.2.5.2 Strobe speed

Range min	Range max	Function
0	255	Frequency: 0,1 Hz ➡ 10 Hz

5.2.5.3 Response time

Range min	Range max	Function
0	0	OFF
1	255	Response time: 0,1 s ➡ 4 s

*5.2.5.4 Control mode**

Range min	Range max	Function
0	0	-
1	10	RDM OFF
11	20	RDM ON
21	30	Fixture Reset
31	40	Dimmer Curve Linear
41	50	Dimmer Curve Square
51		
61		
71		
81		
91		
101	110	Cooling mode: Silent
111	120	Cooling mode: Normal
121	130	Cooling mode: Full power
131	255	Not used

(*) Function activated after 5 seconds - needs to go back to zero to activate second function.

5.2.6 RDM remote control

5.2.6.1 Protocol

ANSI E1.20 – 2010 / ANSI E1.37 - 1
For more information about RDM protocol: http://www.rdmprotocol.org/

5.2.6.2 Functions

PID		Description	Standard	Get	Set	Queued_ Message	Ack_Timer	VERSION 4.00
Network Management								
00	01	DISCOVERY_UNIQUE_BRANCH	E1.20					✓
00	02	DISCOVERY_MUTE	E1.20		✓			✓
00	03	DISCOVERY_UNMUTE	E1.20		✓			✓
00	15	COMMUNICATION_STATUS	E1.20	✓	✓			✓
Status Collection								
00	20	QUEUED_MESSAGE	E1.20	✓				✓
00	30	STATUS_MESSAGES	E1.20	✓				✓
00	31	STATUS_ID_DESCRIPTION	E1.20	✓				✓
00	32	CLEAR_STATUS_ID	E1.20		✓			✓
00	33	QUEUED_MESSAGE_SENSOR_SUBSCRIBE	E1.20-2023	✓	✓			
RDM Information								
00	50	SUPPORTED_PARAMETERS	E1.20	✓				✓
00	51	PARAMETER_DESCRIPTION	E1.20	✓				✓
Product Information								
00	60	DEVICE_INFO	E1.20	✓			✓	✓
00	70	PRODUCT_DETAIL_ID_LIST	E1.20	✓				✓
00	80	DEVICE_MODEL_DESCRIPTION	E1.20	✓				✓
00	81	MANUFACTURER_LABEL	E1.20	✓				✓
00	82	DEVICE_LABEL	E1.20	✓	✓	✓	✓	✓
00	90	FACTORY_DEFAULTS	E1.20	✓	✓		✓	✓
00	C0	SOFTWARE_VERSION_LABEL	E1.20	✓			✓	✓
00	C2	BOOT_SOFTWARE_VERSION_LABEL	E1.20	✓				✓
DMX512 Setup								
00	E0	DMX512_PERSONALITY	E1.20	✓	✓	✓	✓	✓
00	E1	DMX512_PERSONALITY_DESCRIPTION	E1.20	✓				✓
00	F0	DMX512_STARTING_ADDRESS	E1.20	✓	✓	✓	✓	✓
01	20	SLOT_INFO	E1.20	✓				✓
01	21	SLOT_DESCRIPTION	E1.20	✓				✓
Sensors								
02	00	SENSOR_DEFINITION	E1.20	✓				✓
02	01	SENSOR_VALUE	E1.20	✓				✓
Dimmer Settings								
03	40	DIMMER_INFO	E1.37-1	✓				✓
03	42	MAXIMUM_LEVEL	E1.37-1	✓	✓	✓	✓	✓
03	43	CURVE	E1.37-1	✓	✓	✓	✓	✓
03	44	CURVE_DESCRIPTION	E1.37-1	✓				✓
03	45	OUTPUT_RESPONSE_TIME	E1.37-1	✓	✓	✓	✓	✓
03	46	OUTPUT_RESPONSE_TIME_DESCRIPTION	E1.37-1	✓				✓
03	47	MODULATION_FREQUENCY	E1.37-1	✓	✓	✓	✓	✓
03	48	MODULATION_FREQUENCY_DESCRIPTION	E1.37-1	✓				✓
Power / Lamp Settings								
04	00	DEVICE_HOURS	E1.20	✓				✓
04	01	LAMP_HOURS	E1.20	✓	✓			✓
Display Settings								
05	01	DISPLAY_LEVEL	E1.20	✓	✓	✓	✓	✓

PID		Description	Standard	Get	Set	Queued_ Message	Ack_Timer	SULLY 4.00
Control								
10	00	IDENTIFY_DEVICE	E1.20	✓	✓	✓		✓
10	01	RESET_DEVICE	E1.20		✓		✓	✓
10	20	PERFORM_SELFTEST	E1.20	✓	✓	✓	✓	✓
10	21	SELF_TEST_DESCRIPTION	E1.20					✓
RDMnet Management								
07	00	LIST_INTERFACES	E1.37-2	✓				✓
07	01	INTERFACE_LABEL	E1.37-2	✓				✓
07	02	INTERFACE_HARDWARE_ADRESS_TYPE1	E1.37-2	✓				✓
07	03	IPV4_DHCP_MODE	E1.37-2	✓	✓		✓	✓
07	05	IPV4_CURRENT_ADDRESS	E1.37-2	✓			✓	✓
07	06	IPV4_STATIC_ADDRESS	E1.37-2	✓	✓			✓
07	09	INTERFACE_APPLY_CONFIGURATION	E1.37-2		✓			✓
07	0A	IPV4_DEFAULT_ROUTE	E1.37-2	✓	✓		✓	✓
07	0B	DNS_IPV4_NAME_SERVER	E1.37-2	✓	✓		✓	✓
PID Manufacturer								
85	58	SELFTEST_RESULT	E1.20	✓				✓
85	59	CURRENT_IP_ADDRESS	E1.20	✓			✓	✓
85	5A	CURRENT_NETMASK	E1.20	✓			✓	✓
85	5B	CURRENT_DRIVER_STATUS	E1.20	✓			✓	✓
85	5C	CUSTOM_RESPONSE_TIME_DESCRIPTION	E1.20	✓				✓
85	5D	CUSTOM_RESPONSE_TIME_VALUE	E1.20	✓	✓	✓	✓	✓
85	60	DATA_MODE_DESCRIPTION	E1.20	✓				✓
85	61	DATA_MODE_VALUE	E1.20	✓	✓	✓	✓	✓
85	62	STANDALONE_VALUE_DESCRIPTION	E1.20	✓				✓
85	63	STANDALONE_VALUE	E1.20	✓	✓	✓	✓	✓
85	64	SACN_UNIVERSE_VALUE_DESCRIPTION	E1.20	✓				✓
85	65	SACN_UNIVERSE_VALUE	E1.20	✓	✓	✓	✓	✓
85	66	ARTNET_UNIVERSE_VALUE_DESCRIPTION	E1.20	✓				✓
85	67	ARTNET_UNIVERSE_VALUE	E1.20	✓	✓	✓	✓	✓
85	68	SERIAL_DESCRIPTION	E1.20	✓				✓
85	69	SERIAL	E1.20	✓	✓	✓		✓
85	6A	DMX_HOLD_DESCRIPTION	E1.20	✓				✓
85	6B	DMX_HOLD	E1.20	✓	✓	✓	✓	✓
85	6C	COMMAND_LOCK_DESCRIPTION	E1.20	✓				✓
85	6D	COMMAND_LOCK_VALUE	E1.20	✓	✓	✓	✓	✓
85	6E	DRIVER_CALIBRATE_DESCRIPTION	E1.20	✓				✓
85	6F	DRIVER_CALIBRATE_VALUE	E1.20	✓	✓	✓	✓	✓
85	70	NODE_DESCRIPTION	E1.20	✓				✓
85	71	NODE_VALUE	E1.20	✓	✓	✓	✓	✓
85	72	TERMINATOR_DESCRIPTION	E1.20	✓				✓
85	73	TERMINATOR	E1.20	✓	✓	✓	✓	✓
85	74	DMX_ERROR_COUNTER_DESCRIPTION	E1.20	✓				✓
85	75	DMX_ERROR_COUNTER	E1.20	✓	✓	✓	✓	✓

5.3 Home values & Standalone

"Home values" represent a selection of parameters manually entered into the device via the keypad to produce a defined lighting effect and dimming behavior.
These Home values can be set in the following modes:
Variable White version (VW)Cool White version (CW)

Functions *	Mode 1: Dimmer 8B	Mode 2: Dimmer 16B	Mode 3: Dimmer 8B CCT	Mode 4: Dimmer 16B CCT	Standalone **
Dimmer	Valeur DMX	Valeur DMX	Valeur DMX	Valeur DMX	HOME VALUE
Response Time	HOME VALUE	Valeur DMX	HOME VALUE	Valeur DMX	HOME VALUE
Tunable white: CCT	HOME VALUE	HOME VALUE	Valeur DMX	Valeur DMX	HOME VALUE

Cool White version (CW)

Functions *	Mode 1: Dimmer 8B	Mode 2: Dimmer 16B	Standalone **
Dimmer	Valeur DMX	Valeur DMX	HOME VALUE
Response Time	HOME VALUE	Valeur DMX	HOME VALUE

If the function is not controlled by DMX, the Home value is automatically activated.

(*) Functions are displayed according to the selected mode (Mode 1-2-3-4 for VW / Mode 1-2 for CW).
- In the case of using one or more functions in Mode 1 / 2 / 3 / 4
  Data mode ➡ personality ➡ Mode 1 / Mode 2 / Mode 3/ Mode 4

(**) Defines a standalone operating mode in the following cases:
- As default values when used without data — Data mode ➡ Protocol ➡ Standalone
- As reference values following a data signal loss. — Set up ➡ Data set up ➡ DMX hold ➡ Standalone

5.4 Network

Our network stack can handle several flows of protocol at the same time.

Protocol always available:
- Web page to set up parameters - *See section 5.4.4*
- LLRP (Low Level Recovery Protocol) for IP network configuration - *See section 5.4.5*

A selection of Protocols dedicated to lighting:
- Art-Net V4 - *See section 5.4.1*
- sACN - ***See section** 5.4.2*
- Dual: Sacn + Art-RDM (DMX512 data signal + RDM) - *See section 5.4.3*

From July 2024 the Robert Juliat equipment based on RJ LED2 platform is configured as follows:
- DHCP (**Dynamic Host Configuration Protocol - RFC1531**) ON
  ➡ https://www.rfc-editor.org/rfc/rfc1531
- Zeroconf (**Zero-configuration networking – IPv4LL/APIPA – RFC3927**) ON
  ➡ https://www.rfc-editor.org/rfc/rfc3927

IP Addressing of Parameters - *See section 5.1.2*
Default:
- At startup, the device's IP address is set to 000.000.000.000 with a subnet mask of 000.000.000.000
- After connecting to the network, the device awaits the assignment of an IP address and subnet mask by the DHCP server.
- If there is no DHCP server, a unique IP address and subnet mask are automatically assigned.
  IP : 169.254.XXX.XXX Mask : 255.255.0.0

Most personal computers are configured with DHCP and Zeroconf enabled, so the IP address defaults to 169.254.X.X with a subnet mask of 255.255.0.0.
When connected to a Robert Juliat device, since the IP address/mask range are in the same class, network communication works seamlessly.
This configuration was chosen to make it easier for non-IT technicians.

Static IP:
It's possible to configure a static IP address, but be sure to select a unique IP address with the correct subnet mask.
Configuration can be done via the Web Page, RDM, LLRP, Art-Net, or locally.

Default IP Address:
When DHCP mode is OFF and no static IP address has been selected, the device will default to a Class A IP address of 2.XXX.XXX.XXX with a subnet mask of 255.0.0.0.
This address can be found on a label near the ID plate or by pressing the right arrow on the local control.

Default Settings:
DHCP = OFF
Address = 2.XXX.XXX.XXX
Mask = 255.0.0.0

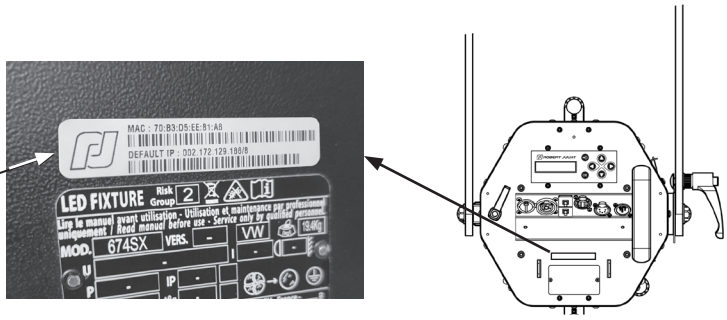

Changing the Controlling Computer's IP Address:
- The IP address and subnet mask of both the fixture and the computer must be on the same network class.
- The computer's IP address must be different.
- Refer to your operating system's support to modify IPv4 settings:
  Change your IP address on Windows
  ➡ https://support.microsoft.com/en-us/windows/change-tcp-ip-settings-bd0a07af-15f5-cd6a-363f-ca2b6f391ace
  Change your IP address on Mac
  ➡ https://support.apple.com/en-ae/guide/mac-help/mh14129/mac

Example: Using the fixture's default IP address
1 - Computer IP address: 2.2.2.2
2 - Computer subnet mask: 255.0.0.0

5.4.1 Art-Net remote control

5.4.1.1 Protocol

Artistic Licence Art-Net v4.
For more information about Art-Net protocol: http://art-net.org.uk/

5.4.1.2 Configuration

Set mode through Web interface
(***see 5.9* Web interface**)

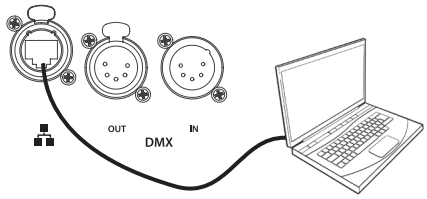

Set mode through RDM protocol

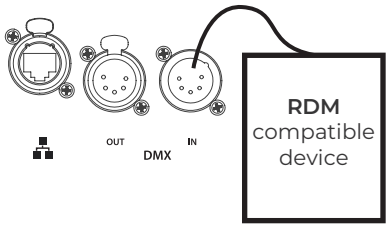

Local control

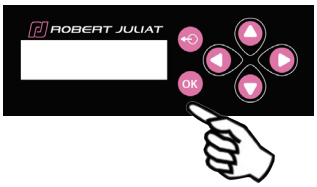

1 - If necessary, change IP settings
2 - Set Art-Net Universe
3 - Set DMX address
2 - Set personality mode (***see 5.2.4. DMX chart***)

5.4.1.3 Local set-up

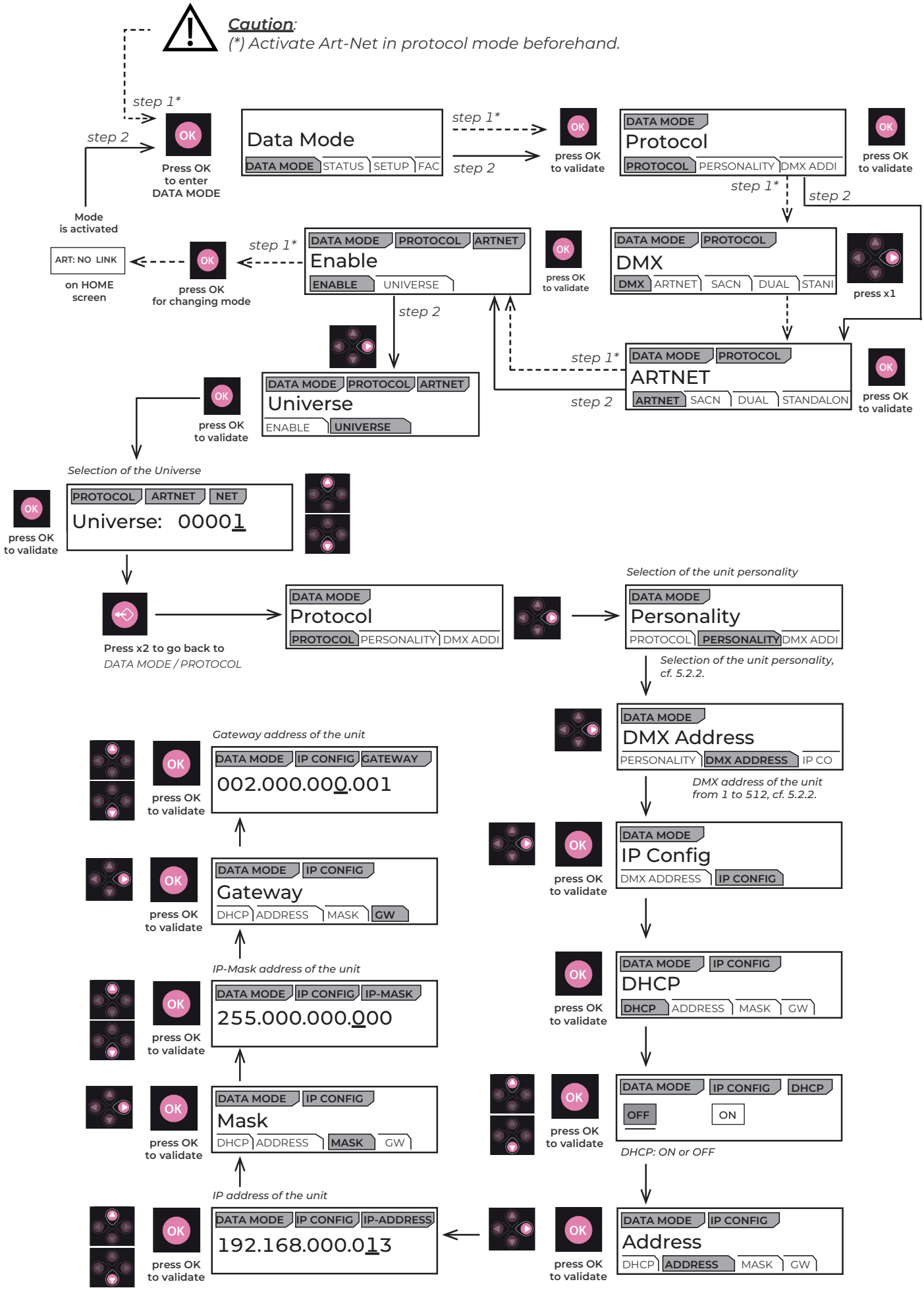

5.4.2 sACN remote control

5.4.2.1 Protocol

ANSI E1.31 – 2009 sACN (Streaming-ACN)

5.4.2.2 Configuration

Set mode through Web interface
(***see 5.9* Web interface**)

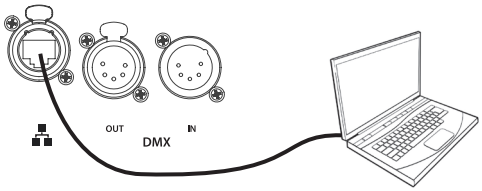

Set through local control

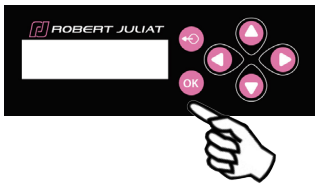

1 - If necessary, change IP settings
2 - Set sACN universe
3 - Set DMX address
2 - Set personality mode (***see 5.2.4. DMX chart***)

5.4.2.3 Local set-up

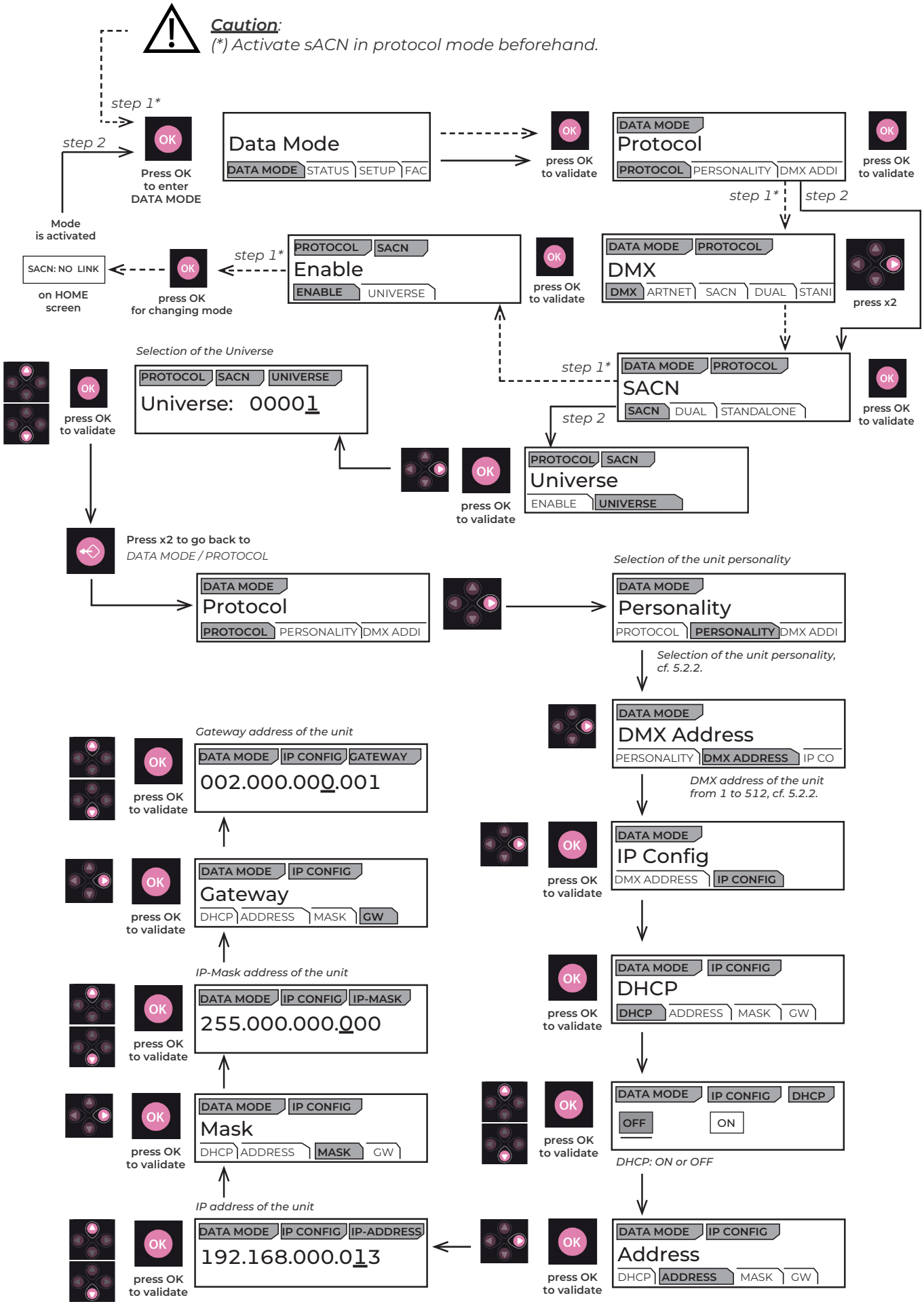

5.4.3 Dual remote control

5.4.3.1 Protocol

Dual Mode: Available only on an Ethernet network

It allows to send a DMX 512 signal through a sACN data stream and at the same time to use an Artnet/ArtRdm data stream to control, set and monitor the equipment via RDM.

This mode can be set by Web interface or the local control screen.

5.4.3.2 Configuration

Set mode through Web interface
(***see 5.9* Web interface**)

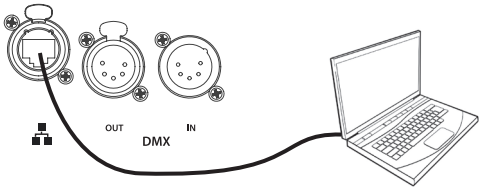

Set through local control

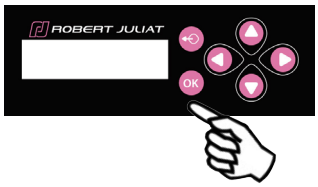

1 - If necessary, change IP settings
2 - Set DUAL universe
3 - Set DMX address
4 - Set personality mode (***see 5.2.4. DMX chart***)

5.4.3.3 Local set-up

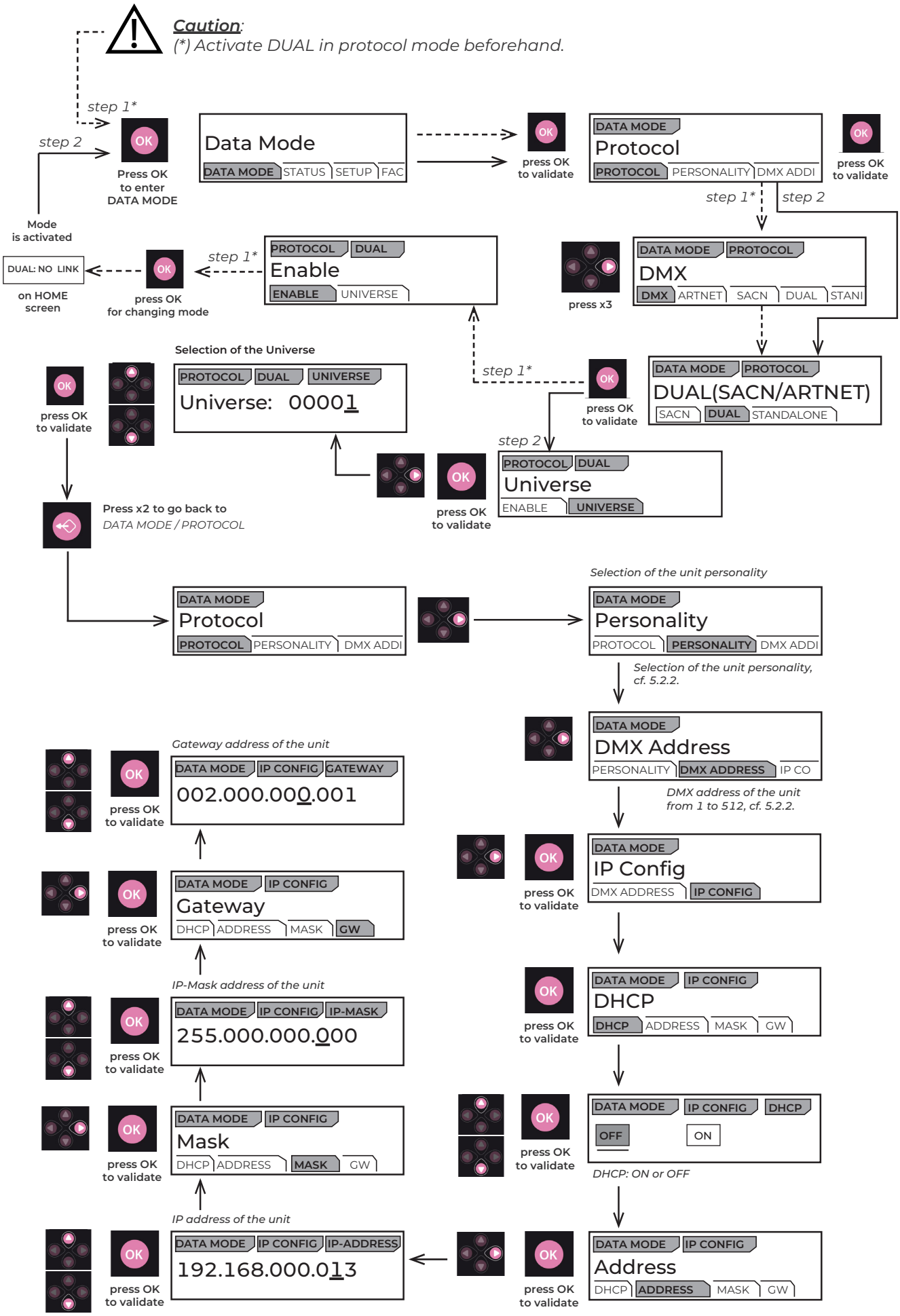

5.4.4 Web interface

5.4.4.1 Control

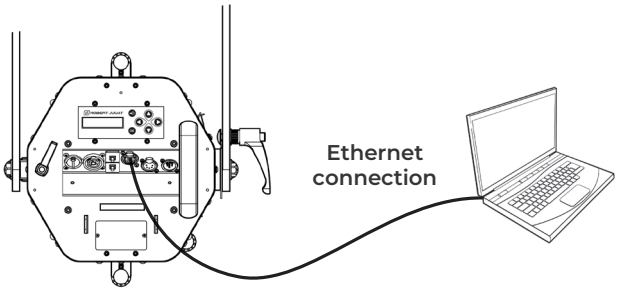

The fixture must be connected to a compatible network or directly linked to a computer with an RJ45 Ethernet cable.

The fixture's IP address: ***see section 5.4. Network***

5.4.4.2 Connection to the Web interface

1 - Open a web browser (Microsoft Edge, Firefox, Apple Safari...)
2 - Enter the fixture's IP address in the browser's address bar
- "00X" is read as "X".
- Never type a zero (0) before the numbers XX or X (***see 5.4***)

3 - The HOME page will appear, and all settings can now be viewed and modified.

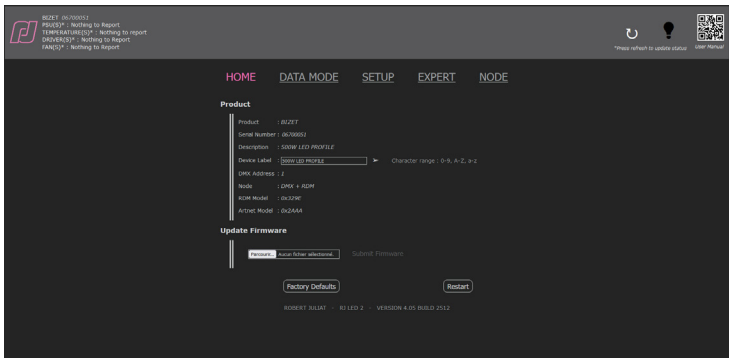

HOME Page

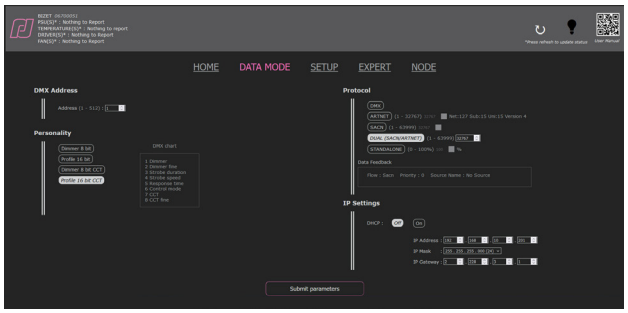

DATA MODE Page

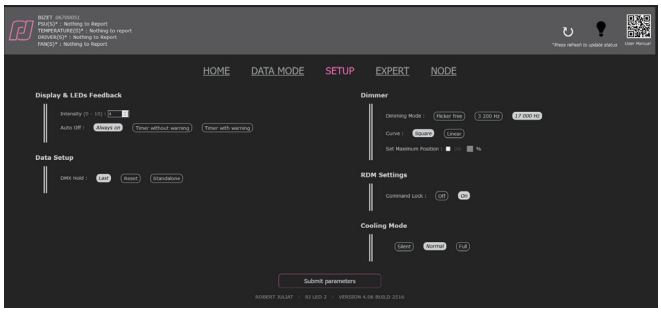

SETUP Page

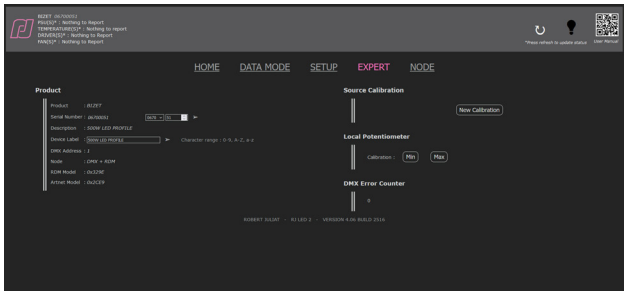

EXPERT Page**,** password-protected (1280).

(*) UID : RDM Unique Identifier

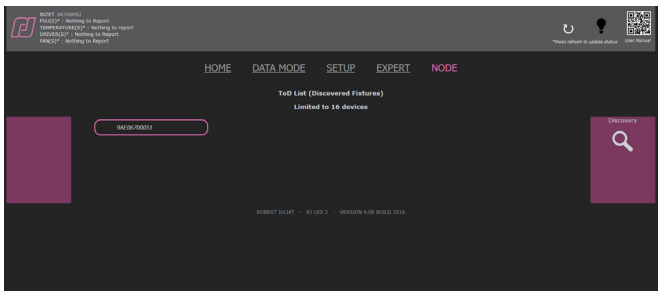

NODE Page
UID* list of devices detected by RDM on the DMX OUT link; the first UID is the fixture.

5.4.5 LLRP (Low-Level Reader Protocol)

LLRP is a multicast protocol that facilitates basic IP configuration. It is part of the ESTA E1.33 RDMnet standard.
LLRP can be used for the initial configuration of networked equipment. It provides a low-level mechanism for discovering and configuring the network parameters of devices, including IP settings and basic RDMnet configuration settings.

LLRP Targets expose these parameters for configuration and respond to discovery requests from LLRP Managers. Once an LLRP Manager discovers one or more LLRP Targets, it can use LLRP to send RDM commands to retrieve or modify these parameters.

A SOLUTION FOR INCORRECT OR UNKNOWN IP CONFIGURATION

Network connectivity issues are often caused by misconfigured network addresses, with improperly configured subnet masks being the most common problem.
LLRP uses two multicast IP addresses, enabling communication even when all other network communication has failed.
Since multicast addresses are unaffected by a misconfigured subnet mask, LLRP provides an efficient and reliable solution to recover from network misconfiguration.

In summary, LLRP simplifies the process of identifying and configuring the IP addressing of LLRP-compatible devices on your network.

All Robert Juliat equipment based on the RJ LED2 platform includes LLRP functionality.

Two LLRP Manager software tools are available for free:

- DMXworkshop by Wayne Howell from Singularity (UK): https://singularity-uk.com/product/dmx-workshop/

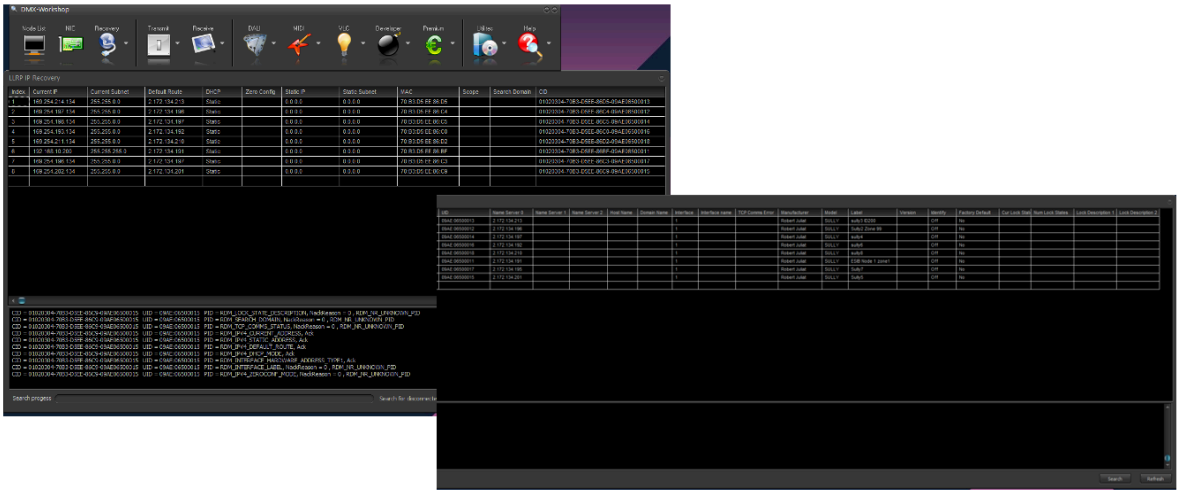

- CLU/Netron from Obsidian : https://obsidiancontrol.com/netron-clu

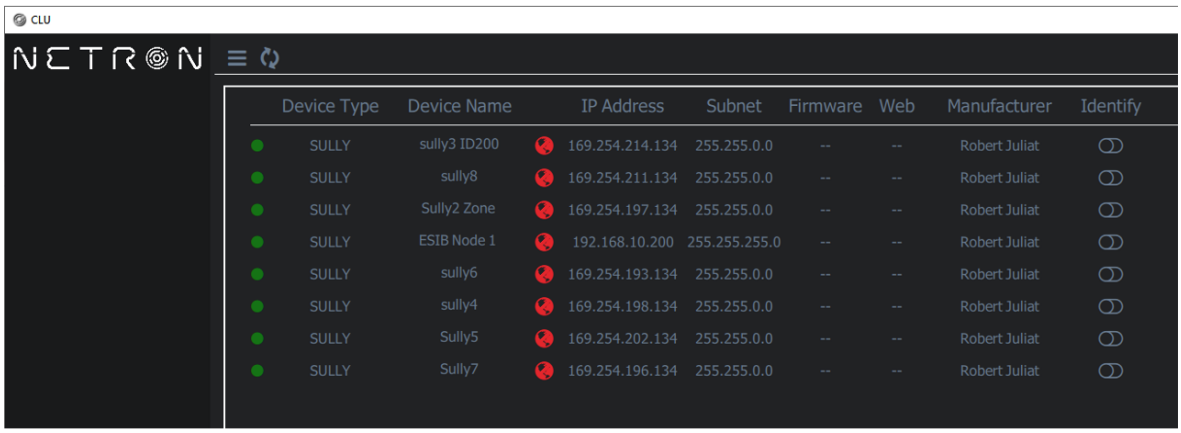

5.5 Fan cooling modes

5.5.1 Range

Mode	Fan Speed
SILENT	Minimum – constant speed
NORMAL	Regulated – depending on ambiant temperature
FULL	Maximum – constant speed

5.5.2 Control

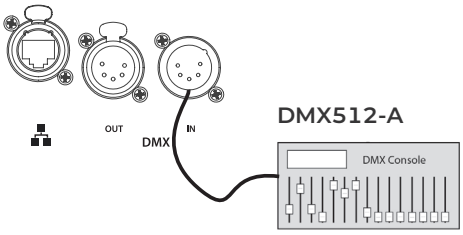

Remotely by DMX512-A
Mode 3 – 4

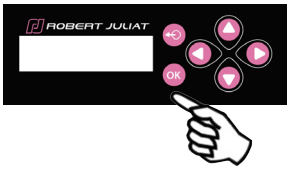

Locally ➡ selection in
SETUP / COOLING

6 Service

6.1 Preventive maintenance

6.1.1 Frequency

General maintenance should be performed at least once a year or more frequently if the equipment is operated in adverse conditions (smoke, heat, humidity, touring, etc.).

6.1.2 General cleaning

Remove dust from the unit.

6.1.3 General visual check

- No trace of heat.
- No loose contacts.
- No missing parts.
- Tighten mechanical assemblies (screws, bolts and nuts, etc.).

6.1.4 LED source

- Do not touch the surface of the LED source (no contact with your hands or any tools).
- Do not put compressed air directly on the source.
- Contact a certified RJ distributor in case of residuals or other objects located on the surface of the LED source.

6.1.5 Optics

Only use solutions containing alcohol to clean optical parts (lenses).
- To clean the optical parts, use a soft cloth in combination with distilled water or isopropyl alcohol recommended for coated optics. Do not use any cleaning product that contains solvents or abrasives, as these can cause surface damage.
- Dry with a soft lint-free cloth.

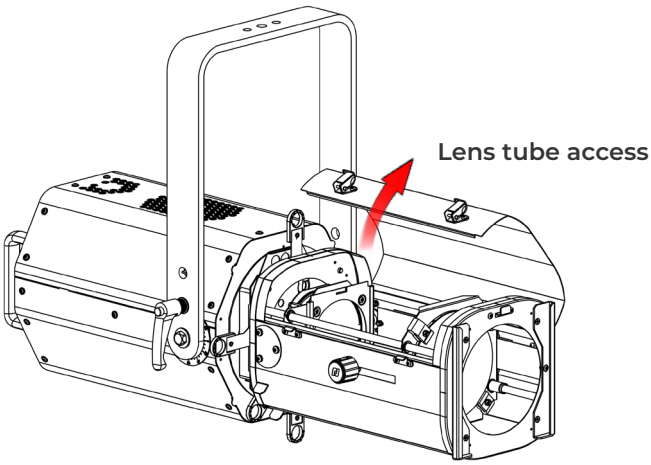

6.1.6 Lamp house cleaning

Inner parts:

- To clean the optical parts, use a soft cloth in combination with distilled water or isopropyl alcohol recommended for coated optics. Do not use any cleaning product that contains solvents or abrasives, as these can cause surface damage.
- Dry with a soft lint-free cloth.

How to remove the Bizet lamp house for cleaning:

We recommend you place your luminaire on a flat clean surface.
Disconnect from the mains before servicing.

- Dismantle the 2 lamp house covers (**A**) by removing the 28 screws in the recommended order (**B**) using a torx screwdriver with a TX20 bit.

- Reassemble the covers (**A**) by fixing the screws back into place in reverse order (**B**), once servicing has been completed.

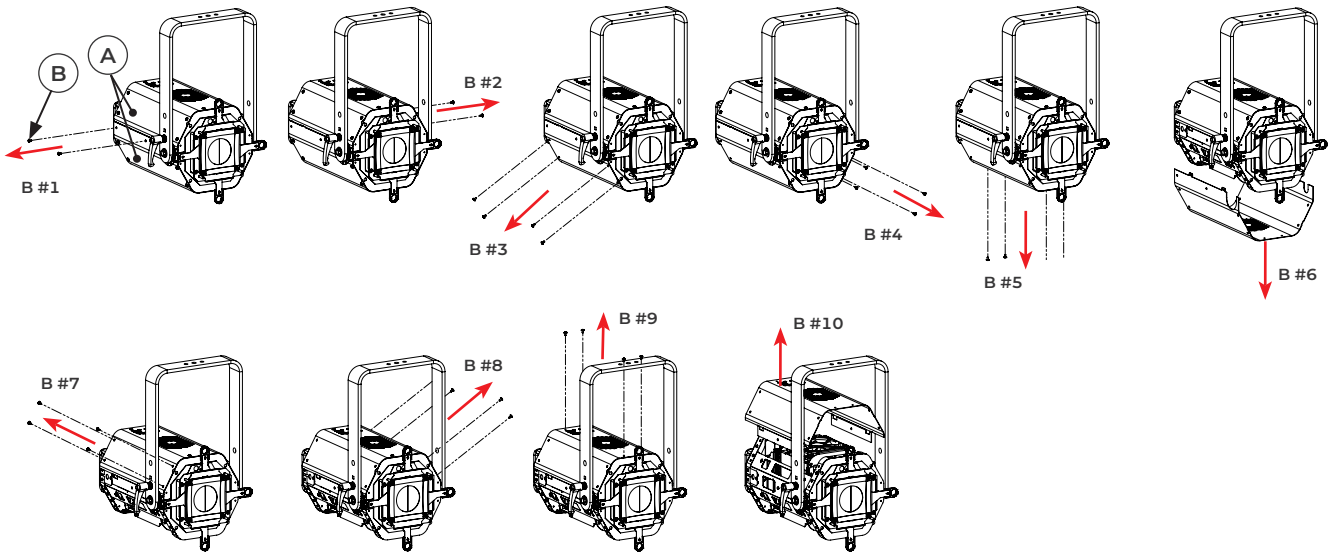

- To access to the double condenser optics holder for cleaning:
  Dismantle the top lamp house cover (**A**) by removng the 16 screws **B** #1 & #2 + **B** #7 to #10 using a torx screwdriver with a TX20 bit. Then remove the plate (**C**).

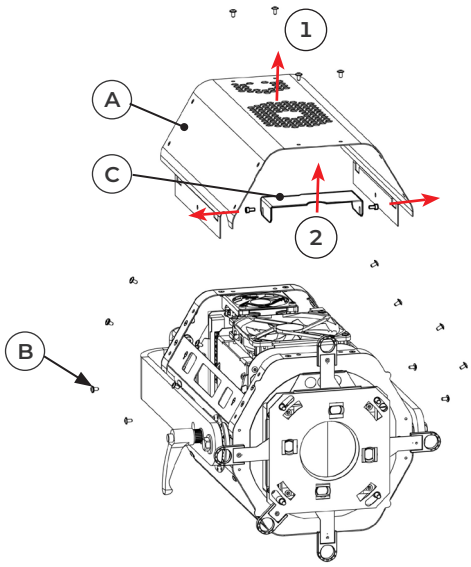

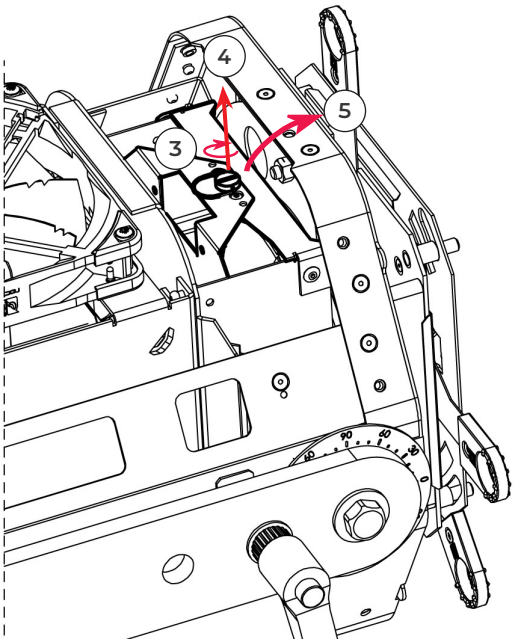

6.2 Analysis

In case of problem, contact RJ distributor with the following information:

- Model, version and serial number of the product.
- From the menu status:
  - Software version
  - LED board IDs
  - Device hours
- Description of the problem.

6.3 Electronic thermal management system

In case of overheating, light intensity will be reduced by the system.
Power reduction and temperature values are available by using a RDM protocol compatible device.

6.4 Firmware update

1. **Download the firmware** from one of the following links :
   - www.robertjuliat.com/LED/**PDF_PAGE or scan the QR code:**
   - www.robertjuliat.com/profilespots/**BIZET_670SX**
2. **Unzip** the file. There are 4 files:
   - **Firmware** (.upd2 format)
   - **Firmware history**
   - **Update procedure**
   - **User manual** from firmware version **V4.0x** onwards
3. **Switch on** the lighting fixture.
4. **Connect the fixture to the network** using an **RJ45 Ethernet cable** from your computer.
   You can either connect it to your lighting network (**RJ45**) or directly to your computer (**RJ45**).
5. Open a Web browser (Microsoft Edge, Firefox, Apple Safari, etc.).
6. Enter the fixture's IP address in the browser's address bar
   - "00X" is read as "**X**".
   - **Never type a zero** (0) before the numbers XX or X (*see section 5.4*).
7. Upload your firmware file (.upd2).
   In the "**Update firmware**" window, select the update file and then click on "**Submit firmware**".

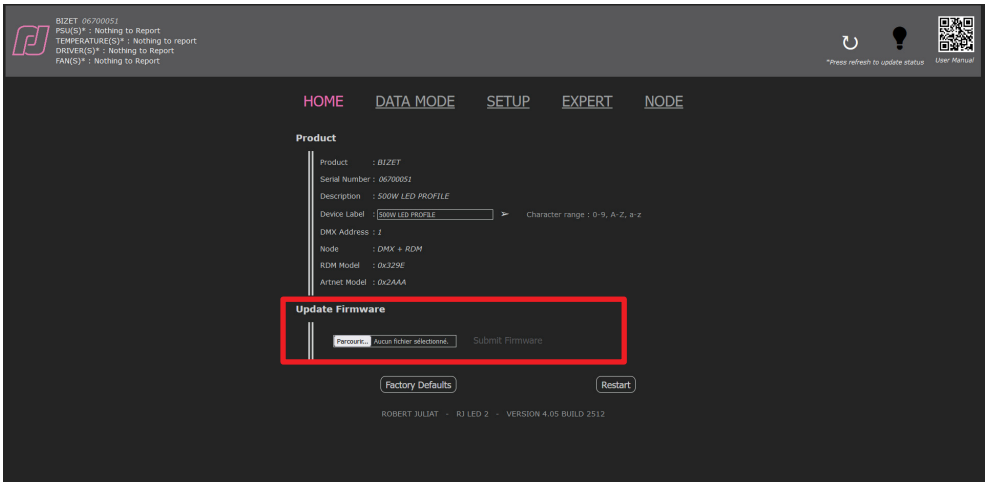

6.5 Factory defaults

Set to factory defaults / reset through web interface (Home page)

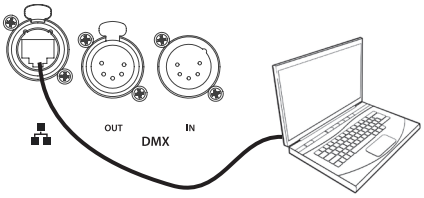

Set to factory defaults / reset through RDM protocol

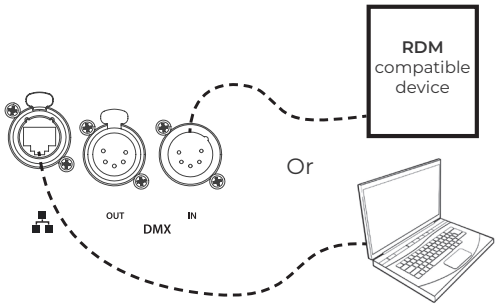

Set to factory defaults / reset through local control

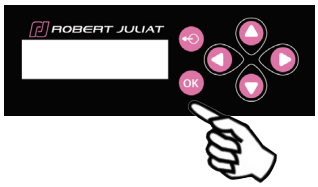

Select **FACTORY DEFAULT** in the main menu to reset all values and parametres

6.6 Selftest

Select **SELFTEST** in the STATUS menu :

Press OK to start SELFTEST

At the end of each test, a **PASS/FAIL** message will be displayed.
If the DMX and network functions need to be tested, the system will prompt you to perform certain operations.

---

test report: Fail P=Pass F=Fail

fans P	pow P	temp P	dmxi P
dmxo F	net F	drv P	

Test Report
An “F” (FAIL) or “P” (PASS) will be displayed at the end of the self-test (SELFTEST).

If the problem persists, please take a photo of the test result and send it either to your Robert Juliat dealer or to the Robert Juliat After-Sales Service, if requested (email: service@robertjuliat.fr)